Pietro Fiorentini

Reflux 819/FO

High - Medium Pressure Gas Regulator

TECHNICAL BROCHURE

Pietro Fiorentini USA Inc.
606 Park Drive | Weirton, WV 26062, United States of America | +1 304 232 9115
fio.westvirginia@fiorentini.com

Pietro Fiorentini S.p.A.
Via E.Fermi, 8/10 | 36057 Arcugnano, Italy | +39 0444 968 511
sales@fiorentini.com

The data is not binding. We reserve the right
to make changes without prior notice.

reflux819fo_technicalbrochure_USA_revE

Who we are

We are a global organization that specializes in designing and manufacturing technologically advanced solutions for natural gas treatment, transmission and distribution systems.

We are the ideal partner for operators in the Oil & Gas sector, with a business solutions that span the whole natural gas chain.

We are constantly evolving to meet our customers' highest expectations in terms of quality and reliability.

Our aim is to be a step ahead of the competition, with customized technologies and an after-sale service program undertaken with the highest level of professionalism.

Pietro Fiorentini advantages

- Localized technical support
- Experience since 1940
- Operating in over 100 countries

Area of Application

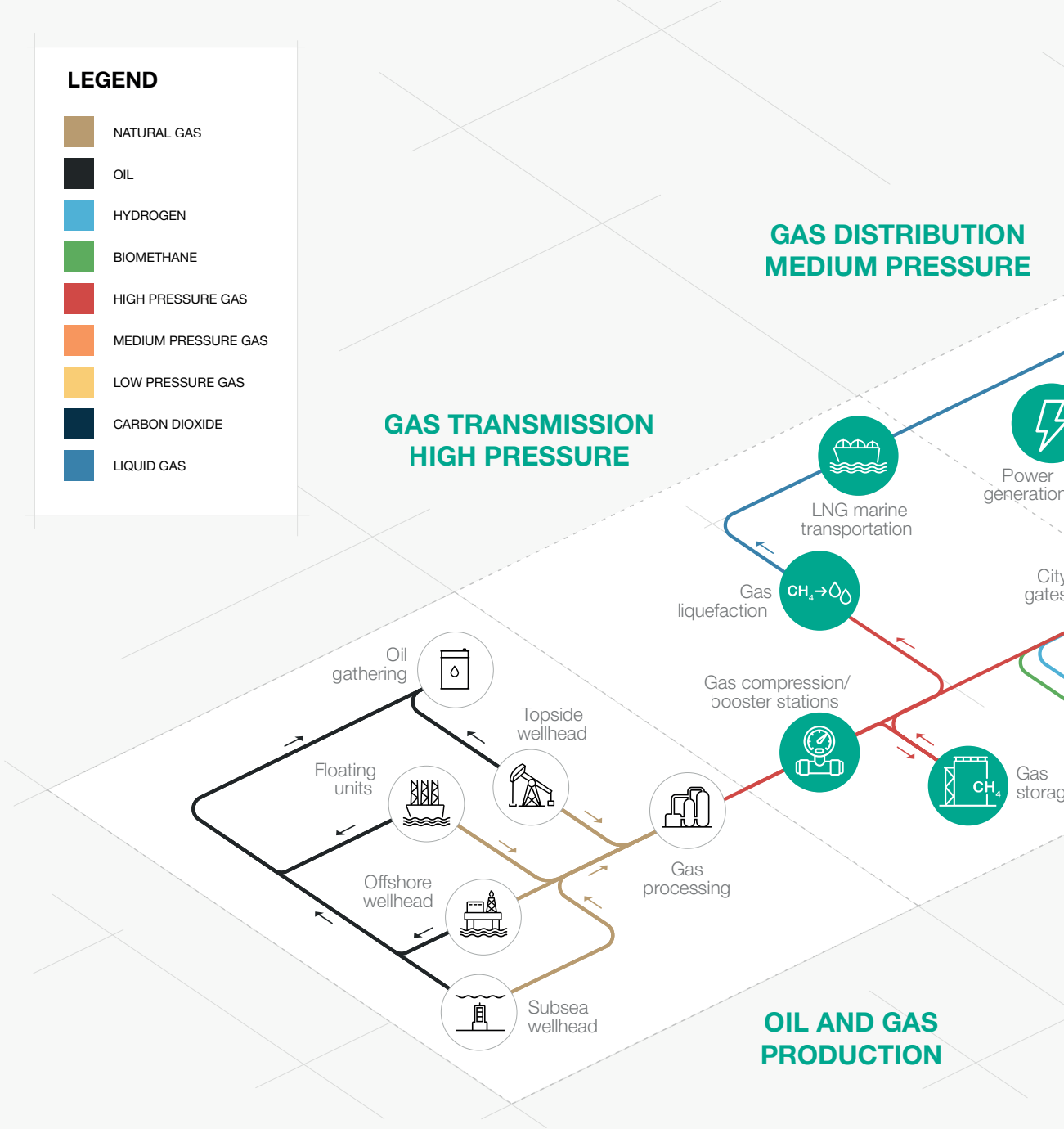

Green icon indicates the application where this product is suitable for

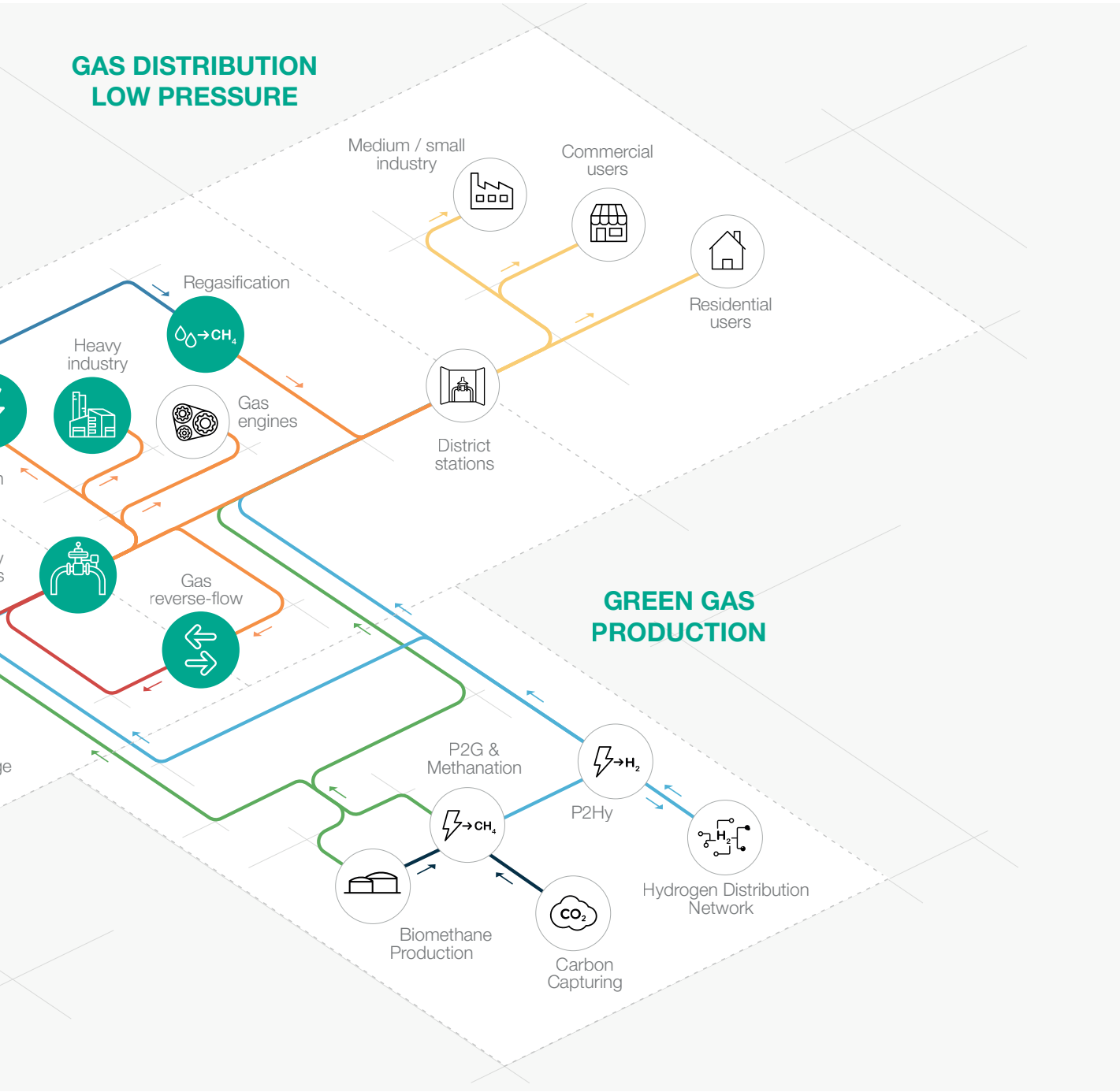

Figure 1 Area of application map

Introduction

Reflux 819/FO is one of the **pilot-operated gas pressure regulators** designed and manufactured by Pietro Fiorentini.

This device is suitable for use with previously filtered non-corrosive gases, and it is mainly used for high-pressure transmission systems, power plants and for medium pressure natural gas distribution networks.

According to the European Standard EN 334, it is classified as **Fail Open**.

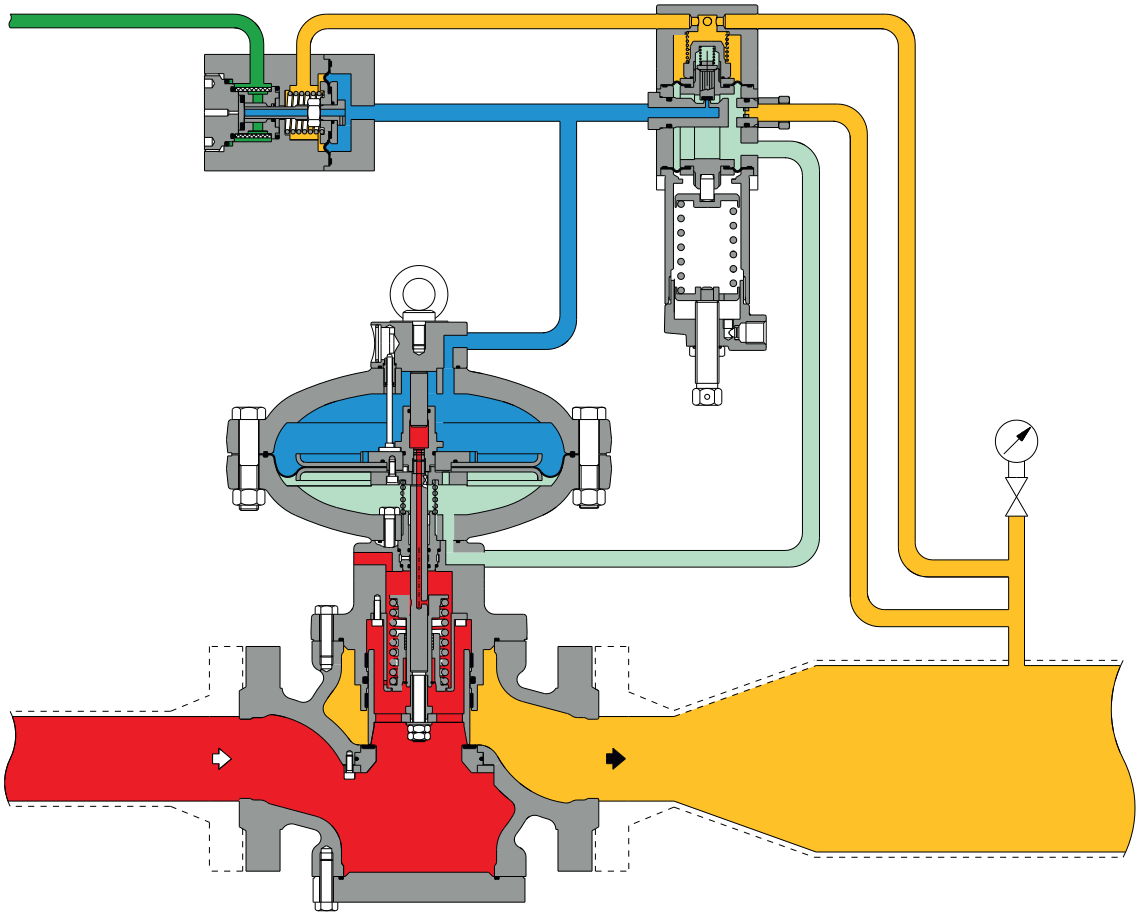

Inlet pressure

Outlet pressure

Motorisation

Feeding pressure for pilot system

Supply of pilot system

Figure 2 Reflux 819/FO

Features

Reflux 819/FO is a **pilot-operated** device for high pressure and medium pressure with a unique **dynamic balancing system** which ensures an **outstanding turn down ratio** combined with an extremely **accurate outlet pressure control.**

Reflux 819/FO is a balanced pressure regulator. This means that the controlled outlet pressure is not affected by variations in the inlet pressure and flow during its operation. Therefore a balanced regulator can have a single-size orifice for all pressure and flow conditions.

This regulator is suitable for use with previously filtered, non corrosive gases, in natural gas transmission and distribution networks as well as high load industrial application.

It is a **truly top entry design** which allows **easy maintenance** of parts directly in the field **without removing the body from the pipework.**
Set point adjustement of the regulator is operated via a pilot unit used to load and unload the motorization pressure to the bottom chamber.

The modular design of Reflux 819/FO pressure regulators allows for the factory (or retro-site fitting) of an emergency monitor regulator PM/819 or a slamshut valve SB/82 or HB/97 (depending on size). Additionally an integral silencer DB/819 can be installed. All without removing the body from the pipeline.

Figure 3 Reflux 819/FO with silencer DB/819

Figure 4 Reflux 819/FO with SB/82

Reflux 819/FO competitive advantages

- Compact and simple design
- High accuracy
- High turn-down ratio
- True Fail Open plug and seat regulator
- Built-in pilot's filter
- Top Entry
- Easy maintenance
- Built-in accessories
- Biomethane compatible and available with specific versions for full Hydrogen or blending
- Balanced type

Features

Features	Values	
Design pressure* (PS[1] / DP[2])	up to 10.3 MPa up to 1500 psig	
Ambient temperature* (TS[1])**	**Standard version** from -10 °C to +70 °C from +14 °F to +158 °F	**Arctic version** from -40 °C to +65 °C from -40 °F to +150 °F
Inlet gas temperature*,***	**Standard version** from -10 °C to +70 °C from +14 °F to +158 °F	**Arctic version** from -20 °C to +60 °C from -4 °F to +140 °F
Inlet pressure (MAOP / p_{umax}[1])	from 0.3 to 10.2 MPa (for CE marked product it is limited to 10.0 MPa) from 43.5 to 1480 psig (for CE marked product it is limited to 1450 psig)	
Range of downstream pressure (Wd[1])	from 0.1 to 7.4 MPa from 14.5 to 1073.3 psig	
Available accessories	DB/819 Silencer, LDB/171 Silencer, PM/819 Monitor, SB/82 Slam shut, HB/97 Slam shut	
Minimum operating differential pressure (Δp_{min}[1])	0.2 MPa | 29 psig	
Accuracy class	up to 2.5% gauge	
Lock-up pressure class	up to 5% gauge	
Nominal size (DN[1,2])	DN 25 | 1"; DN 50 | 2"; DN 80 | 3"; DN 100 | 4"; DN 150 | 6"; DN 200 | 8"; DN 250 | 10"; DN 300 | 12"	
Connections	Class 150, 300, 600 RF or RTJ according to ASME B16.5 and PN16	

([1]) according to EN334 standard
([2]) according to ISO 23555-1 standard
(*) NOTE: Different functional features and/or extended temperature ranges may be available on request. Stated inlet gas temperature range is the maximum for which the equipment's full performance, including accuracy is guaranteed. Product may have a different pressure or temperature ranges according to the version and/or installed accessories.
(**) NOTE: Stated temperature range is the operating range for which the equipment's mechanical resistance and leakage rate are guaranteed. Some body materials, if multiple choices are available, may not be suitable for all the available versions shown.
(***) NOTE: Stated temperature range is the range for which the equipment's full performance, including accuracy and lock-up are guaranteed. Some body materials, if multiple choices are available, may not be suitable for all the available versions shown.

Table 1 Features

Materials and Approvals

Part	Material
Body	ASTM A 352 LCC cast steel for classes ANSI 600 and 300; ASTM A 216 WCB cast steel for classes ANSI 150 and PN 16/40
Heads	ASTM A 350 LF2 steel
Stem	AISI 416 stainless steel
Plug	ASTM A 350 LF2 nickel-plated steel
Seat	Vulcanized Nitrile Rubber on metal support
Diaphragm	Rubberised Canvas (pre-formed by hot-pressing process)
O-rings	Nitrile Rubber
Compression fittings	Made of zync-plated steel according to DIN 2353; on request, stainless steel
NOTE: The materials indicated above refer to the standard models. Different materials can be provided according to specific needs.	

Table 2 Materials

Construction Standards and Approvals

Reflux 819/FO regulator is designed according to the European standard EN 334.
The regulator reacts in opening (Fail Open) according to EN 334.

The product is certified according to European Directive 2014/68/EU (PED).
DVGW certified as a truly Fail Open regulator.
Leakage class: bubble tight, better than VIII according to ANSI/FCI 70-3.

EN 334 PED-CE DVGW

Pilot models and ranges

Type	Model	Operation	Range Wh		Spring Table web link
			MPa	psig	
Main pilot	204/A/FO	Manual	0.1 - 3.3	14.5 - 478.6	TT 1183
Main pilot	205/A/FO	Manual	2 - 6	290 - 870	TT 1183
Main pilot	207/A/FO	Manual	4.1 - 7.4	594 - 1073	TT 1183

Table 3 Settings table

Pilot adjustment	
Pilot type .../A	Manual setting
Pilot type .../D	Electric remote control setting
Pilot type .../CS	Pneumatic remote control setting
Pilot type .../MP	Magnetic pilot for remote control setting / flow limitation

Table 4 Pilot adjustment table

General link to the calibration tables: **PRESS HERE** or use the QR code:

PILOT 204/A/FO						
Spring part number	Spring color	d	Lo	De	Spring range (psig)	
					Min.	Max.
US2701541	White	4	100	35	14.5	31.9
US2701800	Yellow	4.5	100	35	31.9	50.8
US2702080	Orange	5	100	35	50.8	72.5
US2702290	Red	5.5	100	35	72.5	116.0
US2702460	Green	6	100	35	116.0	188.5
US2702660	Black	6.5	100	35	188.5	290.1
US2702820	Blue	7	100	35	290.1	478.6
d = Wire Diameter (mm) **Lo** = Spring Length (mm) **De** = External Diameter (mm)						

Table 5 TT 1183 - PILOT 204/A/FO setting springs

PILOT 205/A/FO						
Spring part number	Spring color	d	Lo	De	Spring range (psig)	
					Min.	Max.
US2702820	Blue	7	100	35	290.1	435.1
US2703045	Brown	7.5	100	35	435.1	638.1
US2703224	Grey	8	100	35	638.1	870.2
d = Wire Diameter (mm) **Lo** = Spring Length (mm) **De** = External Diameter (mm)						

Table 6 TT 1183 - PILOT 205/A/FO setting springs

PILOT 207/A/FO						
Spring part number	Spring color	d	Lo	De	Spring range (psig)	
					Min.	Max.
US2703224	Grey	8	100	35	594.6	1073.2
d = Wire Diameter (mm) **Lo** = Spring Length (mm) **De** = External Diameter (mm)						

Table 7 TT 1183 - PILOT 207/A/FO setting springs

Accessories

For the pressure regulators:

- Cg limiter
- Limit switches
- Position transmitter
- Silencer
- Slam shut valve
- Monitor

For the pilot circuit:

- R14/A/S preregulator for the high pressure circuit (differential pressure > 3.5 MPa | 507.6 psig)
- Heating cable for preheating pilot circuit
- Electrical heater PPH200
- Supplementary filter CF14 or CF14/D
- ESD filter CF/5/S
- ATF 15 antifreeze

In-line Monitor

The in-line monitor is generally installed upstream of the worker regulator.
Although the function of the monitor regulator is different, the two regulators are virtually identical from the point of view of their mechanical components.
The only difference is that monitor is set at a higher pressure than active regulator.
The Cg coefficient of the active regulator is the same, however during the sizing process, the differential pressure drop generated by the fully open in-line monitor shall be considered. As a general practice to incorporate this effect, a 20% reduction of the worker regulator's Cg value can be applied.

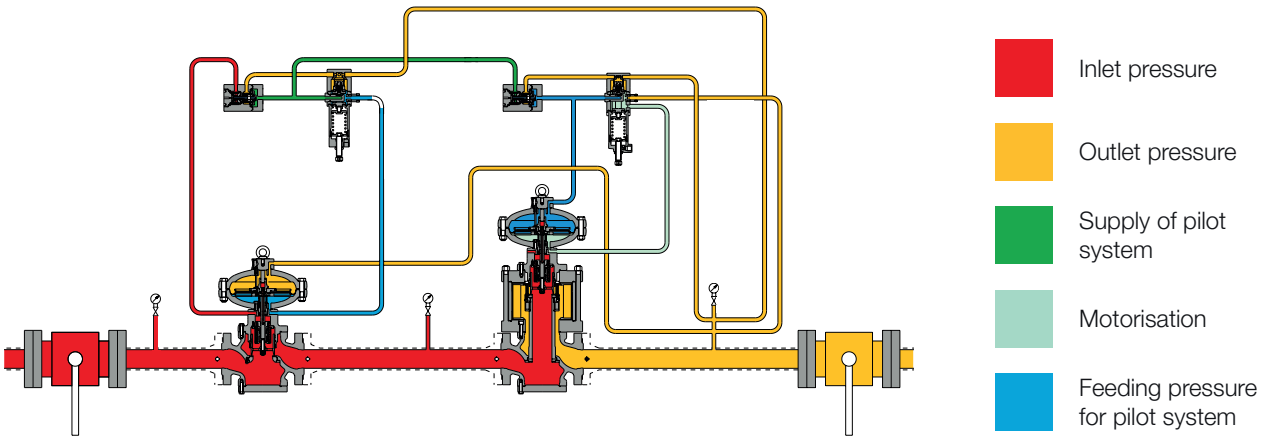

Figure 5 Reflux 819/FO worker with in-line monitor Reflux 819

PM/819 monitor

This emergency regulator (monitor) is directly integrated onto the body of the main regulator. Both pressure regulators, therefore, use the same valve body, although they have independent actuators, pilots and valve seats.

The monitor is normally in the fully open position during normal operation of the worker regulator and takes over in the event of its failure.

The operational characteristics of the PM/819 monitor are the same as for the Reflux 819 regulator (refer to that specific technical brochure).

The Cg coefficients of regulators having an incorporated monitor is 5% lower than those for standard version.

This solution allows the construction of pressure reduction lines with compact dimensions.

Another great advantage offered by the incorporated monitor regulator is that **it can be installed at any time**, even on an existing regulator, **without major changes to the pipework.**

- Compact dimensions
- Completely independent
- “Fail to close” action
- Built-in pilot filter
- Visual opening indicator
- Easy maintenance
- Limit switch option
- Accelerator option

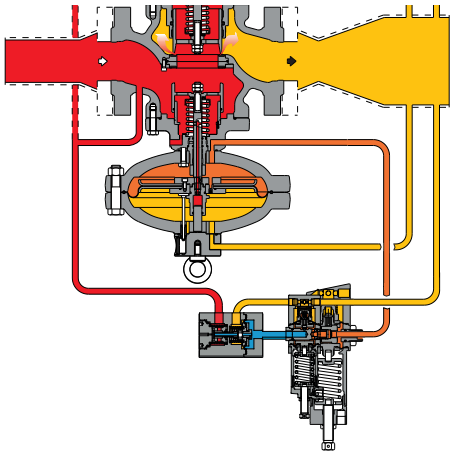

Inlet pressure

Outlet pressure

Feeding pressure for pilot system

Figure 6 Reflux 819/FO with PM/819

Type	Model	Operation	Range Wh		Spring Table web link
			MPa	psig	
Main pilot	204/A	Manual	0.03 - 4.3	4.35 - 623	TT 433
Main pilot	205/A	Manual	2 - 6	290 - 870	TT 799
Main pilot	207/A	Manual	4.1 - 7.4	595 - 1073	TT 1146

Table 8 Settings table

Types of pilot adjustment	
Pilot type .../A	Manual setting
Pilot type .../D	Electric remote control setting
Pilot type .../CS	Pneumatic remote control setting
Pilot type .../MP	Magnetic pilot for remote control setting / flow limitation

Table 9 Pilot adjustment table

The monitor regulator can be equipped with an additional pilot called “accelerating valve” to enable a quick response time during the monitor take over. According to PED the accelerating valve is required on the monitor when acting as a safety accessory.

Type	Model	Operation	Range Wh		Spring Table web link
			MPa	psig	
Accelerating valve	M/A	Manual	0.03 - 2	4.35 - 290	TT 354
Accelerating valve	M/A1	Manual	2 - 6.3	290 - 913	TT 892
Accelerating valve	M/A2	Manual	4 - 7.5	580 - 1087	TT 892

Table 10 Accelerating valve adjustment table

General link to the calibration tables: **PRESS HERE** or use the QR code:

PILOT 204/A						
Spring part number	Spring color	d	Lo	De	Spring range (psig)	
					Min.	Max.
US2701260	White	3.5	60	35	4.3	14.5
US2701530	Yellow	4	60	35	14.5	29.0
US2702070	Orange	5	60	35	29.0	87.0
US2702450	Red	6	60	35	87.0	174.0
US2702815	Green	7	60	35	174.0	262.0
US2703220	Black	8	60	35	262.0	406.1
US2703420	Blue	8.5	60	35	406.1	623.6
d = Wire Diameter (mm) **Lo** = Spring Length (mm) **De** = External Diameter (mm)						

Table 11 TT 433 - PILOT 204/A setting springs

PILOT 205/A						
Spring part number	Spring color	d	Lo	De	Spring range (psig)	
					Min.	Max.
US2702820	Blue	7	100	35	290.0	435.1
US2703045	Brown	7.5	100	35	435.1	638.2
US2703224	Grey	8	100	35	638.2	870.2
d = Wire Diameter (mm) **Lo** = Spring Length (mm) **De** = External Diameter (mm)						

Table 13 TT 799 - PILOT 205/A setting springs

PILOT 207/A						
Spring part number	Spring color	d	Lo	De	Spring range (psig)	
					Min.	Max.
US2703224	Grey	8	100	35	594.6	1073.2
d = Wire Diameter (mm) **Lo** = Spring Length (mm) **De** = External Diameter (mm)						

Table 14 TT 1146 - PILOT 207/A setting springs

M/A ACCELERATING VALVE						
Spring part number	Spring color	d	Lo	De	Spring range (psig)	
					Min.	Max.
US2701260	White	3.5	60	35	4.3	14.5
US2701530	Yellow	4	60	35	14.5	29.0
US2702070	Orange	5	60	35	29.0	87.0
US2702450	Red	6	60	35	87.0	174.0
US2702815	Green	7	60	35	174.0	262.0
US2703220	Black	8	60	35	262.0	406.1
US2703420	Blue	8.5	60	35	406.1	623.6
d = Wire Diameter (mm) **Lo** = Spring Length (mm) **De** = External Diameter (mm)						

Table 12 TT 354 - M/A ACCELERATING VALVE setting springs

M/A ACCELERATING VALVE						
Spring part number	Spring color	d	Lo	De	Spring range (psig)	
					Min.	Max.
US2701260	White	3.5	60	35	4.3	14.5
US2701530	Yellow	4	60	35	14.5	30.4
US2702070	Orange	5	60	35	30.4	79.8
US2702450	Red	6	60	35	79.8	159.5
US2702815	Green	7	60	35	159.5	290.1
d = Wire Diameter (mm) **Lo** = Spring Length (mm) **De** = External Diameter (mm)						

Table 15 TT 354 - M/A ACCELERATING VALVE setting springs

M/A1 ACCELERATING VALVE						
Spring part number	Spring color	d	Lo	De	Spring range (psig)	
					Min.	Max.
US2702820	Blue	7	100	35	290.1	478.6
US2703045	Brown	7.5	100	35	478.6	623.6
US2703224	Grey	8	100	35	623.6	913.7
d = Wire Diameter (mm) **Lo** = Spring Length (mm) **De** = External Diameter (mm)						

Table 16 TT 892 - M/A1 ACCELERATING VALVE setting springs

M/A2 ACCELERATING VALVE						
Spring part number	Spring color	d	Lo	De	Spring range (psig)	
					Min.	Max.
US2703224	Grey	8	100	35	580.1	1087.7
d = Wire Diameter (mm) **Lo** = Spring Length (mm) **De** = External Diameter (mm)						

Table 17 TT 892 - M/A2 ACCELERATING VALVE setting springs

DB/819 silencer

Whenever certain noise limit is desired, an additional silencer allows to considerably reduce the noise level (dBA).

Reflux 819/FO pressure regulator can be supplied with an **incorporated silencer** in either the standard version or version with incorporated slam shut or monitor regulator.

The high efficiency noise absorption takes place at the point where the noise is generated, thus preventing its propagation.

With the built-in silencer, the Cg valve coefficient is 5% lower than the corresponding version without.

Given the modular arrangement of the regulator, the silencer may be retrofitted to both standard Reflux 819/FO version as well as those with incorporated slam shut or monitor, **without any need to modify the main piping**.

Pressure reduction and control operate in the same manner as in the standard version.

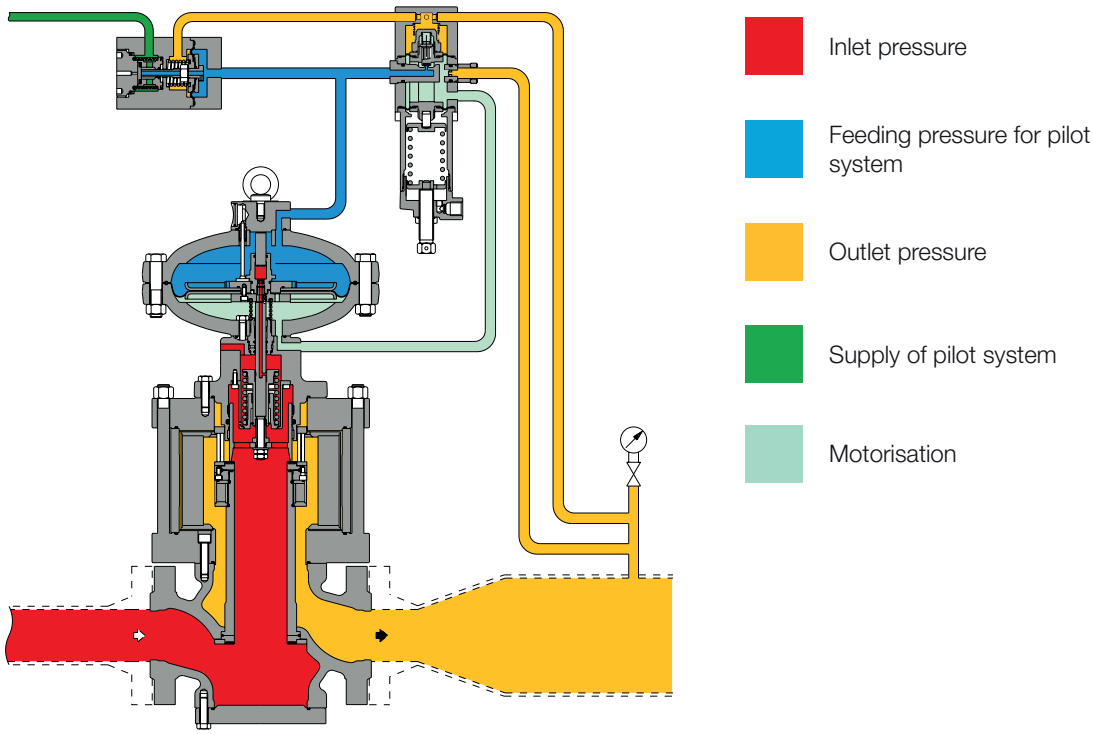

Figure 7 Reflux 819/FO with DB/819 silencer

The charts below represent the silencer effectiveness based on some common reference conditions for 2”, 4”and 6”. For actual calculations at specific desired conditions please refer to the online sizing tool or contact your closest Pietro Fiorentini representative.

- Pd 0.4 MPa | 4 barg NO Silencer
- Pd 2 MPa | 20 barg NO SILENCER
- Pd 4 MPa | 40 barg NO Silencer
- Recommended noise limit (85 dBA at 1 mt | 3 feet)
- Pd 0.4 MPa | 4 barg DB/819
- Pd 2 MPa | 20 barg DB/819
- Pd 4 MPa | 40 barg DB/819

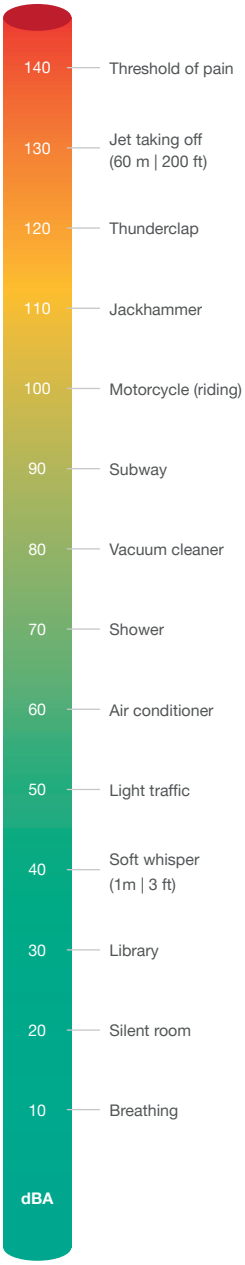

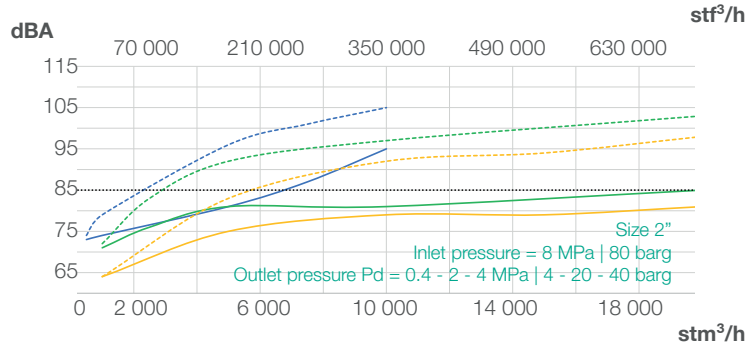

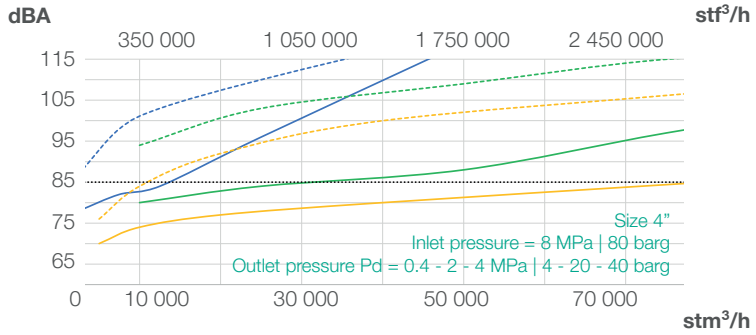

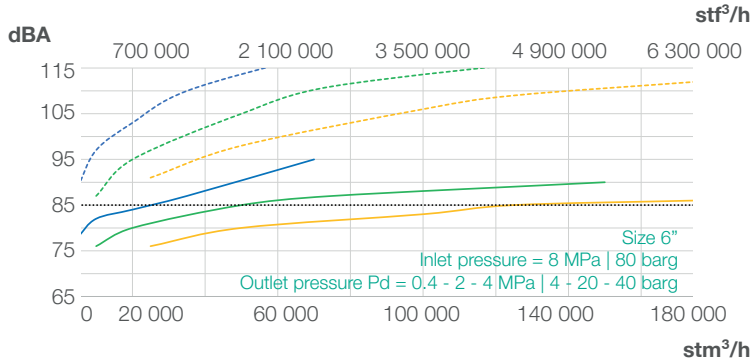

Chart 1 Reflux 819/FO’s silencer efficiency charts

SB/82 or HB/97 slam shut valves

Reflux 819/FO pressure regulator offers the possibility of installing an **SB/82 or HB/97 incorporated slam shut valve**, depending on the regulator size, and this can be done either during the manufacturing process or be retrofitted in the field.

SB/82 is available for all sizes, while HB/97 is available from 4” to 12” only.

Retrofitting can be done without modifying the pressure regulator assembly.
With the built-in slam shut, the Cg valve coefficients is 5% lower than the corresponding version without.

The main characteristics of this device are:

- OPSO — Over Pressure Shut-Off
- UPSO — Under Pressure Shut-Off
- Internal by-pass
- Push botton for tripping test
- Compact dimensions
- Easy maintenance
- Remote tripping option
- Limit switch option

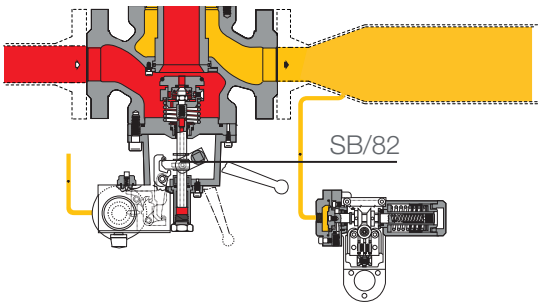

Figure 8 Reflux 819/FO with SB/82

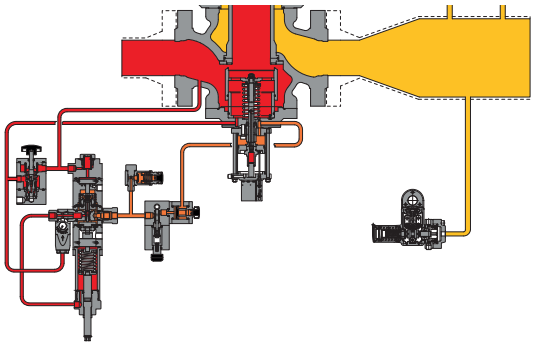

Figure 9 Reflux 819/FO with HB/97

Inlet pressure

Motorisation

Outlet pressure

Pressure switch types and ranges					
SSV Type	**Model**	**Operation**	**Range Wh**		**Spring Table web link**
			MPa	**psig**	
SB/82	102M	OPSO	0.02 - 0.55	2.9 - 79.8	TT 1331
		UPSO	0.02 - 0.28	2.9 - 40.6	
SB/82	102MH	OPSO	0.02 - 0.55	2.9 - 79.8	TT 1331
		UPSO	0.28 - 0.55	40.6 - 79.8	
SB/82	103M	OPSO	0.2 - 2.2	29.0 - 319.1	TT 1331
		UPSO	0.02 - 0.8	2.9 - 116.0	
SB/82	103MH	OPSO	0.2 - 2.2	29.0 - 319.1	TT 1331
		UPSO	0.8 - 1.9	116.0 - 275.6	
SB/82	104M	OPSO	1.5 - 4.5	217.6 - 652.7	TT 1331
		UPSO	0.16 - 1.8	23.2 - 216.1	
SB/82	104MH	OPSO	1.5 - 4.5	217.6 - 652.7	TT 1331
		UPSO	1.8 - 4.1	216.1 - 594.7	
SB/82	105M	OPSO	3 - 9	435.1 - 1305	TT 1331
		UPSO	0.3 -4.4	43.5 - 638.2	
SB/82	105MH	OPSO	3 - 9	435.1 - 1305	TT 1331
		UPSO	4.4 - 9	638.2 - 1305	
HB/97	102M	OPSO	0.02 - 0.55	2.9 - 79.8	TT 1331
		UPSO	0.02 - 0.28	2.9 - 40.6	
HB/97	102MH	OPSO	0.02 - 0.55	2.9 - 79.8	TT 1331
		UPSO	0.28 - 0.55	40.6 - 79.8	
HB/97	103M	OPSO	0.2 - 2.2	29.0 - 319.1	TT 1331
		UPSO	0.02 - 0.8	2.9 - 116.0	
HB/97	103/MH	OPSO	0.2 - 2.2	29.0 - 319.1	TT 1331
		UPSO	0.8 - 1.9	116.0 - 275.6	
HB/97	104M	OPSO	1.5 - 4.5	217.6 - 652.7	TT 1331
		UPSO	0.16 - 1.8	23.2 - 216.1	
HB/97	104MH	OPSO	1.5 - 4.5	217.6 - 652.7	TT 1331
		UPSO	1.8 - 4.1	216.1 - 594.7	
HB/97	105M	OPSO	3 - 9	435.1 - 1305	TT 1331
		UPSO	0.3 -4.4	43.5 - 638.2	
HB/97	105MH	OPSO	3 - 9	435.1 - 1305	TT 1331
		UPSO	4.4 - 9	638.2 - 1305	

Table 18 Settings table

General link to the calibration tables: **PRESS HERE** or use the QR code:

Mod. 102M/102MH - Max pressure						
Spring part number	Spring color	d	Lo	De	Spring range (psig)	
					Min.	Max.
US2701260	White	3.5	60	35	2.90	11.6
US2701530	Yellow	4	60	35	11.6	23.2
US2701790	Yellow/black	4.5	60	35	23.2	37.7
US2702280	White/red	5.5	60	35	37.7	79.8
d = Wire Diameter (mm) **Lo** = Spring Length (mm) **De** = External Diameter (mm)						

Table 19 TT 1331 - Mod. 102M/102MH - Max pressure setting springs

Mod. 102M - Min pressure						
Spring part number	Spring color	d	Lo	De	Spring range (psig)	
					Min.	Max.
US2700513	Red	2	40	15	0.7	2.9
US2700713	Green	2.3	40	15	2.9	5.8
US2700750	Black	2.5	40	15	5.8	11.6
US2700985	Brown	3	40	15	11.6	40.6
d = Wire Diameter (mm) **Lo** = Spring Length (mm) **De** = External Diameter (mm)						

Table 20 TT 1331 - Mod. 102M - Min pressure setting springs

Mod. 102MH - Min pressure						
Spring part number	Spring color	d	Lo	De	Spring range (psig)	
					Min.	Max.
US2700985	Brown	3	40	15	40.6	60.9
US2700980	Blue	3	35	15		
US2700985	Brown	3	40	15	60.9	79.8
US2700985	Brown	3	40	15		
d = Wire Diameter (mm) **Lo** = Spring Length (mm) **De** = External Diameter (mm)						

Table 21 TT 1331 - Mod. 102MH - Min pressure setting springs

Mod. 103M/103MH - Max pressure						
Spring part number	Spring color	d	Lo	De	Spring range (psig)	
					Min.	Max.
US2701530	Yellow	4	60	35	29.0	58.0
US2701790	Yellow/black	4.5	60	35	58.0	108.8
US2702280	White/red	5.5	60	35	108.8	217.5
US2702450	Red	6	60	35	217.5	319.1
d = Wire Diameter (mm) **Lo** = Spring Length (mm) **De** = External Diameter (mm)						

Table 22 TT 1331 - Mod. 103M/103MH - Max pressure setting springs

Mod. 103M - Min pressure						
Spring part number	Spring color	d	Lo	De	Spring range (psig)	
					Min.	Max.
US2700464	Orange	1.7	40	15	2.9	7.3
US2700513	Red	2	40	15	7.3	11.6
US2700713	Green	2.3	40	15	11.6	24.7
US2700750	Black	2.5	40	15	24.7	58.0
US2700985	Brown	3	40	15	58.0	116.0

d = Wire Diameter (mm) **Lo** = Spring Length (mm) **De** = External Diameter (mm)

Table 23 TT 1331 - Mod. 103M - Min pressure setting springs

Mod. 103MH - Min pressure						
Spring part number	Spring color	d	Lo	De	Spring range (psig)	
					Min.	Max.
US2700985	Brown	3	40	15	116.0	188.5
US2700980	Blue	3	35	15		
US2700985	Brown	3	40	15	188.5	275.6
US2700985	Brown	3	40	15		

d = Wire Diameter (mm) **Lo** = Spring Length (mm) **De** = External Diameter (mm)

Table 26 TT 1331 - Mod. 103MH - Min pressure setting springs

Mod. 104M/104MH - Max pressure						
Spring part number	Spring color	d	Lo	De	Spring range (psig)	
					Min.	Max.
US2702280	White/Red	5.5	60	35	217.6	435.1
US2702450	Red	6	60	35	435.1	652.6

d = Wire Diameter (mm) **Lo** = Spring Length (mm) **De** = External Diameter (mm)

Table 24 TT 1331 - Mod. 104M/104MH - Max pressure setting springs

Mod. 104M - Min pressure						
Spring part number	Spring color	d	Lo	De	Spring range (psig)	
					Min.	Max.
US2700713	Green	2.3	40	15	23.2	43.5
US2700750	Black	2.5	40	15	43.5	116.0
US2700985	Brown	3	40	15	116.0	261.1

d = Wire Diameter (mm) **Lo** = Spring Length (mm) **De** = External Diameter (mm)

Table 25 TT 1331 - Mod. 104M - Min pressure setting springs

Mod. 104MH - Min pressure						
Spring part number	Spring color	d	Lo	De	Spring range (psig)	
					Min.	Max.
US2700985	Brown	3	40	15	261.1	435.1
US2700980	Blue	3	35	15		
US2700985	Brown	3	40	15	435.1	594.6
US2700985	Brown	3	40	15		

d = Wire Diameter (mm) **Lo** = Spring Length (mm) **De** = External Diameter (mm)

Table 30 TT 1331 - Mod. 104MH - Min pressure setting springs

Mod. 105M/105MH - Max pressure						
Spring part number	Spring color	d	Lo	De	Spring range (psig)	
					Min.	Max.
US2702280	White/Red	5.5	60	35	435.1	942.7
US2702450	Red	6	60	35	942.7	1305.3

d = Wire Diameter (mm) **Lo** = Spring Length (mm) **De** = External Diameter (mm)

Table 27 TT 1331 - Mod. 105M/105MH - Max pressure setting springs

Mod. 105M - Min pressure						
Spring part number	Spring color	d	Lo	De	Spring range (psig)	
					Min.	Max.
US2700713	Green	2.3	40	15	43.5	101.5
US2700750	Black	2.5	40	15	101.5	232.1
US2700985	Brown	3	40	15	232.1	638.1

d = Wire Diameter (mm) **Lo** = Spring Length (mm) **De** = External Diameter (mm)

Table 28 TT 1331 - Mod. 105M - Min pressure setting springs

Mod. 105MH - Min pressure						
Spring part number	Spring color	d	Lo	De	Spring range (psig)	
					Min.	Max.
US2700985	Brown	3	40	15	638.1	870.2
US2700980	Blue	3	35	15		
US2700985	Brown	3	40	15	870.2	1305.3
US2700985	Brown	3	40	15		

d = Wire Diameter (mm) **Lo** = Spring Length (mm) **De** = External Diameter (mm)

Table 29 TT 1331 - Mod. 105MH - Min pressure setting springs

Weights and Dimensions

Reflux 819/FO

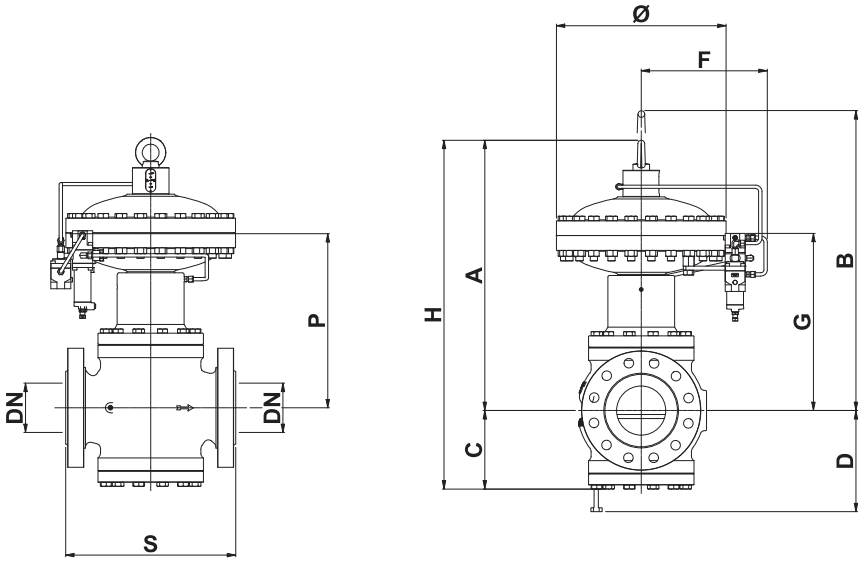

Figure 10 Reflux 819/FO dimensions

Weights and Dimensions (for other connections please contact your closest Pietro Fiorentini representative)								
	[mm] | inches	[mm] | inches	[mm] | inches	[mm] | inches	[mm] | inches	[mm] | inches	[mm] | inches	[mm] | inches
Size (DN)	25 | 1”	50 | 2”	80 | 3”	100 | 4”	150 | 6”	200 | 8”	250 | 10”	300 | 12”
S - ANSI 150/PN16	183 | 7.21”	254 | 10”	298 | 11.75”	352 | 13.88”	451 | 17.75”	543 | 21.38”	673 | 26.50”	737 | 29.02”
S - ANSI 300	197 | 7.75”	267 | 10.52”	317 | 12.48”	368 | 14.49”	473 | 18.62”	568 | 22.38”	708 | 27.88”	775 | 30.52”
S - ANSI 600	210 | 8.25”	286 | 11.25”	336 | 13.25”	394 | 15.52”	508 | 20.00”	609 | 23.98”	752 | 29.62”	819 | 32.25”
Ø	278 | 10.94”	278 | 10.94”	360 | 14.17”	360 | 14.17”	510 | 20.08”	510 | 20.08”	610 | 24.02”	718 | 28.27”
A	371 | 14.61”	435 | 17.13”	490 | 19.29”	532 | 20.94”	789 | 31.06”	750 | 29.53”	1075 | 42.33”	1060 | 41.73”
B	461 | 18.15”	515 | 20.28”	590 | 23.23”	642 | 25.28”	874 | 34.41”	460 | 18.11”	1175 | 46.26”	1330 | 52.36”
C	100 | 3.94”	130 | 5.12”	150 | 5.91”	190 | 7.48”	225 | 8.86”	265 | 10.43”	340 | 13.39”	375 | 14.76”
D	130 | 5.12”	160 | 6.30”	200 | 7.87”	250 | 9.84”	275 | 10.83”	420 | 16.54”	440 | 17.33”	475 | 18.70”
F	310 | 12.20”	310 | 12.20”	320 | 12.60”	320 | 12.60”	420 | 16.54”	420 | 16.54”	470 | 18.50”	500 | 19.68”
G	311 | 12.24”	375 | 14.76”	410 | 16.14”	422 | 16.61”	549 | 21.61”	1015 | 39.96”	847 | 33.35”	780 | 30.71”
H	471 | 18.54”	560 | 22.05”	640 | 25.20”	722 | 28.43”	1014 | 39.92”	370 | 1457”	1515 | 59.65”	1435 | 56.50”
P	220 | 8.66”	285 | 11.22”	320 | 12.60”	332 | 13.07”	459 | 18.07”	460 | 18.11”	775 | 30.52”	762 | 30”
Tubing Connections	1/4” NPT							

Weight	Kg | lbs	Kg | lbs	Kg | lbs	Kg | lbs	Kg | lbs	Kg | lbs	Kg | lbs	Kg | lbs
ANSI 150/PN 16	44 | 97	61 | 134	105 | 231	146 | 322	308 | 679	408 | 899	900 | 1984	1433 | 3159
ANSI 300	45 | 99	62 | 137	109 | 240	156 | 344	345 | 761	470 | 1036	950 | 2094	1450 | 3197
ANSI 600	46 | 101	64 | 141	112 | 247	165 | 364	360 | 794	495 | 1091	1000 | 2204	1530 | 3373

Table 31 Weights and dimensions

Reflux 819/FO + SB/82 or HB/97

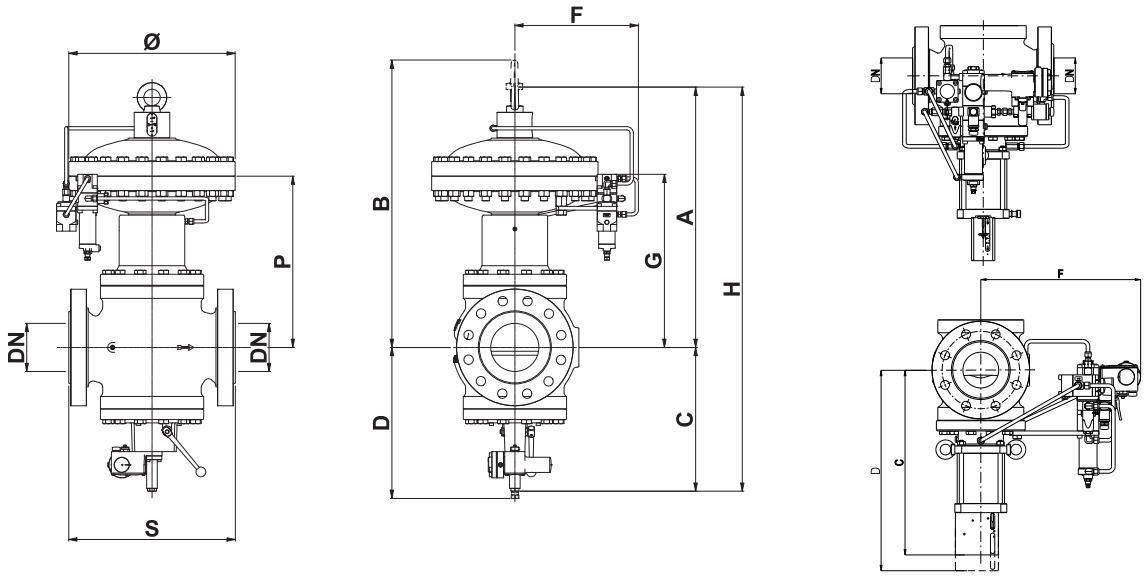

Figure 11 Reflux 819/FO + SB/82 or HB/97 dimensions

Weights and Dimensions (for other connections please contact your closest Pietro Fiorentini representative)								
	[mm] | inches	[mm] | inches	[mm] | inches	[mm] | inches	[mm] | inches	[mm] | inches	[mm] | inches	[mm] | inches
Size (DN)	25 | 1”	50 | 2”	80 | 3”	100 | 4”	150 | 6”	200 | 8”	250 | 10”	300 | 12”
S - ANSI 150/PN16	183 | 7.21”	254 | 10”	298 | 11.75”	352 | 13.88”	451 | 17.75”	543 | 21.38”	673 | 26.50”	737 | 29.02”
S - ANSI 300	197 | 7.75”	267 | 10.52”	317 | 12.48”	368 | 14.49”	473 | 18.62”	568 | 22.38”	708 | 27.88”	775 | 30.52”
S - ANSI 600	210 | 8.25”	286 | 11.25”	336 | 13.25”	394 | 15.52”	508 | 20.00”	609 | 23.98”	752 | 29.62”	819 | 32.25”
Ø	278 | 10.94”	278 | 10.94”	360 | 14.17”	360 | 14.17”	510 | 20.08”	510 | 20.08”	610 | 24.02”	718 | 28.27”
A	371 | 14.60”	435 | 17.13”	490 | 19.29”	532 | 20.94”	789 | 31.06”	887 | 34.92”	1075 | 42.32”	1060 | 41.73”
B	461 | 18.15”	515 | 20.28”	590 | 23.23”	642 | 25.28”	874 | 34.41”	987 | 38.86”	1147 | 45.16”	1330 | 52.36”
C with SB/82	215 | 8.46”	240 | 9.45”	270 | 10.63”	300 | 11.81”	375 | 14.76”	450 | 17.72”	530 | 20.87”	-
C with HB/97	-	-	-	518 | 20.39”	645 | 25.39”	687 | 27.05”	796 | 31.34”	940 | 37”
D with SB/82	290 | 11.42”	330 | 12.99”	380 | 14.96”	440 | 17.32”	560 | 22.05”	625 | 24.61”	730 | 28.74”	-
D with HB/97	-	-	-	650 | 25.59”	835 | 32.87”	445 | 17.52”	1060 | 41.73”	1250 | 49.21”
F	310 | 12.20”	310 | 12.20”	320 | 12.60”	320 | 12.60”	420 | 16.54”	420 | 16.54”	470 | 18.50”	-
F with HB/97	-	-	-	358 | 14.09”	410 | 16.14”	-	510 | 20.08”	530 | 20.87”
G	311 | 12.24”	375 | 14.76”	410 | 16.14”	422 | 16.62”	549 | 21.61”	597 | 23.50”	847 | 33.35”	780 | 30.71”
H	471 | 18.54”	675 | 26.57”	760 | 29.92”	832 | 32.76”	1164 | 45.83”	1337 | 52.64”	1515 | 59.65”	2000 | 78.74”
P	221 | 7.70”	285 | 11.22”	320 | 12.60”	332 | 13.07”	459 | 18.07”	507 | 19.96”	775 | 30.51”	762 | 30”
Tubing Connections	1/4” NPT							

Weight	Kg | lbs	Kg | lbs	Kg | lbs	Kg | lbs	Kg | lbs	Kg | lbs	Kg | lbs	Kg | lbs
ANSI 150/PN 16 with SB/82	53 | 117	71 | 157	115 | 254	160 | 353	320 | 705	460 | 1014	950 | 2094	-
ANSI 150/PN 16 with HB/97	-	-	-	150 | 331	310 | 683	414 | 913	894 | 1971	1655 | 3649
ANSI 300 with SB/82	55 | 121	73 | 161	122 | 269	171 | 377	365 | 805	525 | 1157	1000 | 2205	-
ANSI 300 with HB/97	-	-	-	230 | 507	424 | 935	599 | 1321	1090 | 2403	1730 | 3814
ANSI 600 with SB/82	56 | 123	75 | 165	125 | 276	180 | 397	380 | 838	550 | 1213	1050 | 2315	-
ANSI 600 with HB/97	-	-	-	276 | 608	476 | 1049	684 | 1508	1200 | 2646	1810 | 3990

Table 32 Weights and dimensions

Reflux 819/FO + PM/819

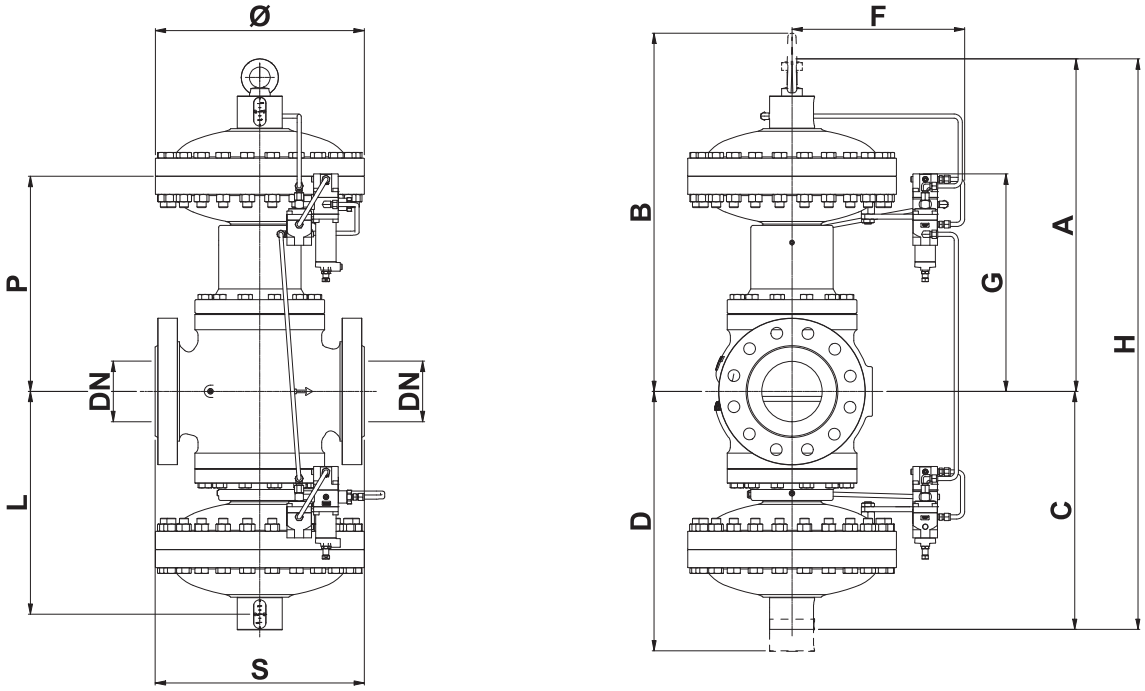

Figure 12 Reflux 819/FO + PM/819 dimensions

Weights and Dimensions (for other connections please contact your closest Pietro Fiorentini representative)							
	[mm] | inches	[mm] | inches	[mm] | inches	[mm] | inches	[mm] | inches	[mm] | inches	[mm] | inches
Size (DN)	25 | 1”	50 | 2”	80 | 3”	100 | 4”	150 | 6”	200 | 8”	250 | 10”
S - ANSI 150/PN16	183 | 7.21”	254 | 10”	298 | 11.75”	352 | 13.88”	451 | 17.75”	543 | 21.38”	673 | 26.50”
S - ANSI 300	197 | 7.75”	267 | 10.52”	317 | 12.48”	368 | 14.49”	473 | 18.62”	568 | 22.38”	708 | 27.88”
S - ANSI 600	210 | 8.25”	286 | 11.25”	336 | 13.25”	394 | 15.52”	508 | 20.00”	609 | 23.98”	752 | 29.62”
Ø	278 | 10.94”	278 | 10.94”	360 | 14.17”	360 | 14.17”	510 | 20.08”	510 | 20.08”	610 | 24.02”
A	371 | 14.61”	435 | 17.13”	490 | 29.29”	532 | 20.94”	789 | 31.06”	887 | 34.92”	1075 | 42.32”
B	461 | 18.15”	515 | 20.28”	590 | 23.23”	642 | 25.28”	874 | 34.41”	967 | 38.07”	500 | 19.69”
C	320 | 12.60”	350 | 13.78”	430 | 16.93”	490 | 19.29”	650 | 25.60”	750 | 29.53”	800 | 31.50”
D	410 | 16.14”	430 | 16.93”	530 | 20.87”	600 | 23.62”	735 | 28.94”	850 | 33.46”	900 | 35.43”
F	310 | 12.20”	310 | 12.20”	320 | 12.60”	320 | 12.60”	420 | 16.54”	420 | 16.54”	470 | 18.50”
G	311 | 12.24”	375 | 14.76”	410 | 16.14”	422 | 16.61”	459 | 18.07”	597 | 23.50”	847 | 33.35”
H	691 | 27.20”	785 | 30.90”	920 | 36.22”	1022 | 40.24”	1439 | 56.65”	1637 | 64.65”	1175 | 46.26”
L	170 | 6.69”	200 | 7.87”	260 | 10.24”	290 | 11.42”	320 | 12.60”	370 | 14.57”	500 | 19.69”
P	221 | 8.70”	285 | 11.22”	320 | 12.60”	332 | 13.07”	459 | 18.07”	507 | 19.96”	847 | 33.35”
Tubing Connections	1/4” NPT						

Weight	Kg | lbs	Kg | lbs	Kg | lbs	Kg | lbs	Kg | lbs	Kg | lbs	Kg | lbs
ANSI 150/PN 16	84 | 185	105 | 231	180 | 397	245 | 540	517 | 1140	670 | 1477	1400 | 3086
ANSI 300	85 | 187	106 | 234	184 | 406	255 | 562	554 | 1221	731 | 1612	1450 | 3197
ANSI 600	86 | 190	108 | 238	187 | 412	264 | 582	569 | 1254	756 | 1667	1500 | 3307

Table 33 Weights and dimensions

Reflux 819/FO + DB/819

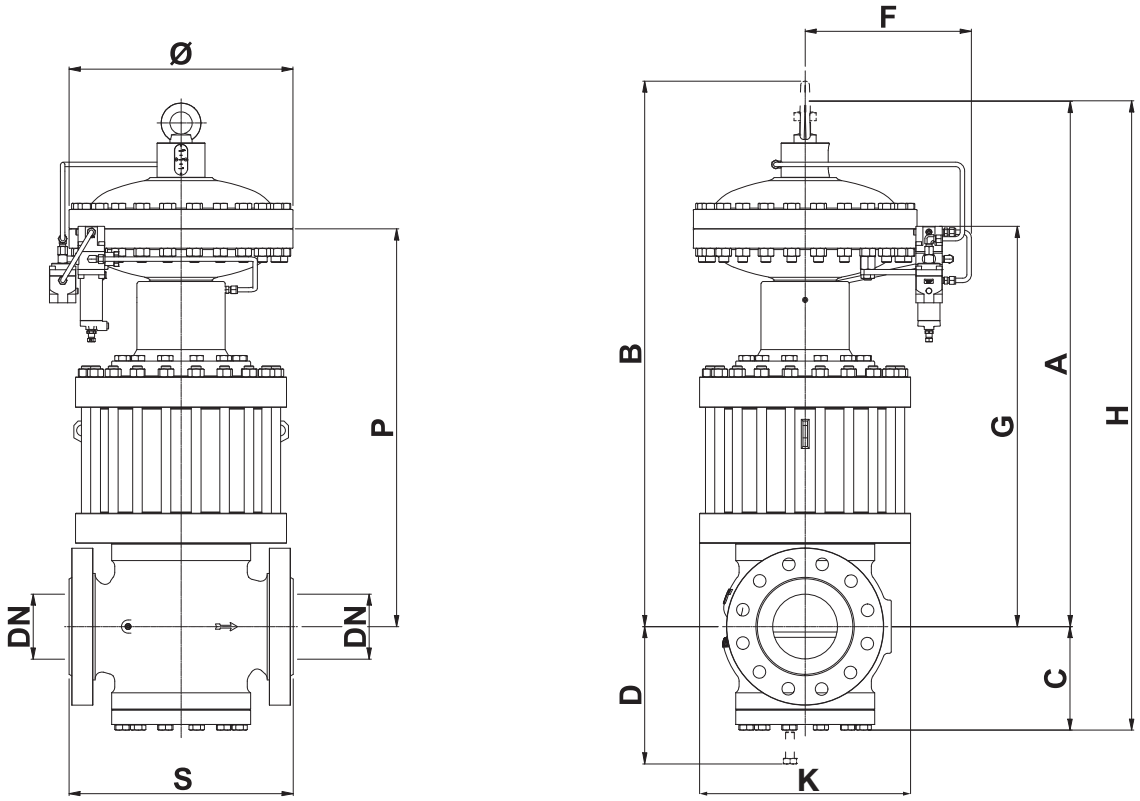

Figure 13 Reflux 819/FO + DB/819 dimensions

Weights and Dimensions (for other connections please contact your closest Pietro Fiorentini representative)								
	[mm] | inches	[mm] | inches	[mm] | inches	[mm] | inches	[mm] | inches	[mm] | inches	[mm] | inches	[mm] | inches
Size (DN)	25 | 1”	50 | 2”	80 | 3”	100 | 4”	150 | 6”	200 | 8”	250 | 10”	300 | 12”
S - ANSI 150/PN16	183 | 7.21”	254 | 10”	298 | 11.75”	352 | 13.88”	451 | 17.75”	543 | 21.38”	673 | 26.50”	737 | 29.02”
S - ANSI 300	197 | 7.75”	267 | 10.52”	317 | 12.48”	368 | 14.49”	473 | 18.62”	568 | 22.38”	708 | 27.88”	775 | 30.52”
S - ANSI 600	210 | 8.25”	286 | 11.25”	336 | 13.25”	394 | 15.52”	508 | 20.00”	609 | 23.98”	752 | 29.62”	819 | 32.25”
Ø	278 | 10.94”	278 | 10.94”	360 | 14.17”	360 | 14.17”	510 | 20.08”	510 | 20.08”	610 | 24.02”	718 | 28.27”
A	571 | 22.48”	660 | 25.98”	760 | 29.92”	842 | 33.15”	1074 | 42.28”	1222 | 48.11”	1575 | 62.01”	1640 | 64.57”
B	661 | 26.02”	725 | 28.54”	505 | 19.88”	937 | 36.89”	1259 | 49.57”	1387 | 54.61”	1775 | 69.88”	1905 | 75”
C	100 | 3.94”	130 | 5.12”	150 | 5.91”	190 | 7.48”	225 | 8.86”	265 | 10.43”	340 | 13.39”	375 | 14.76”
D	130 | 5.12”	160 | 6.30”	200 | 7.87”	250 | 9.84”	275 | 10.83”	320 | 12.60”	440 | 17.32”	475 | 18.70”
F	310 | 12.20”	310 | 12.20”	320 | 12.60”	320 | 12.60”	420 | 16.54”	420 | 16.54”	470 | 18.50”	500 | 19.69”
G	476 | 18.74”	580 | 22.83”	675 | 26.57”	812 | 31.97”	394 | 15.51”	1032 | 40.63”	1375 | 54.13”	1355 | 53.35”
H	671 | 26.42”	790 | 31.10”	845 | 33.27”	1032 | 40.63”	1299 | 51.14”	1487 | 58.54”	1915 | 75.39”	2015 | 79.33”
K	220 | 8.66”	300 | 11.81”	330 | 12.99”	390 | 15.35”	480 | 18.90”	595 | 23.43”	695 | 27.36”	745 | 29.33”
P	421 | 16.57”	485 | 19.09”	565 | 22.24”	627 | 24.68”	829 | 32.64”	907 | 35.71”	1275 | 50.20”	1337 | 52.64”
Tubing Connections	1/4” NPT							

Weight	Kg | lbs	Kg | lbs	Kg | lbs	Kg | lbs	Kg | lbs	Kg | lbs	Kg | lbs	Kg | lbs
ANSI 150/PN 16	70 | 154	126 | 278	195 | 430	260 | 573	565 | 1246	835 | 1841	1280 | 2822	2091 | 4610
ANSI 300	72 | 159	128 | 282	204 | 450	289 | 637	608 | 1340	925 | 2039	1380 | 3042	2286 | 5040
ANSI 600	73 | 161	130 | 287	207 | 456	298 | 657	640 | 1411	950 | 2094	1430 | 3152	2366 | 5216

Table 34 Weights and dimensions

Reflux 819/FO + DB/819 + SB/82 or HB/97

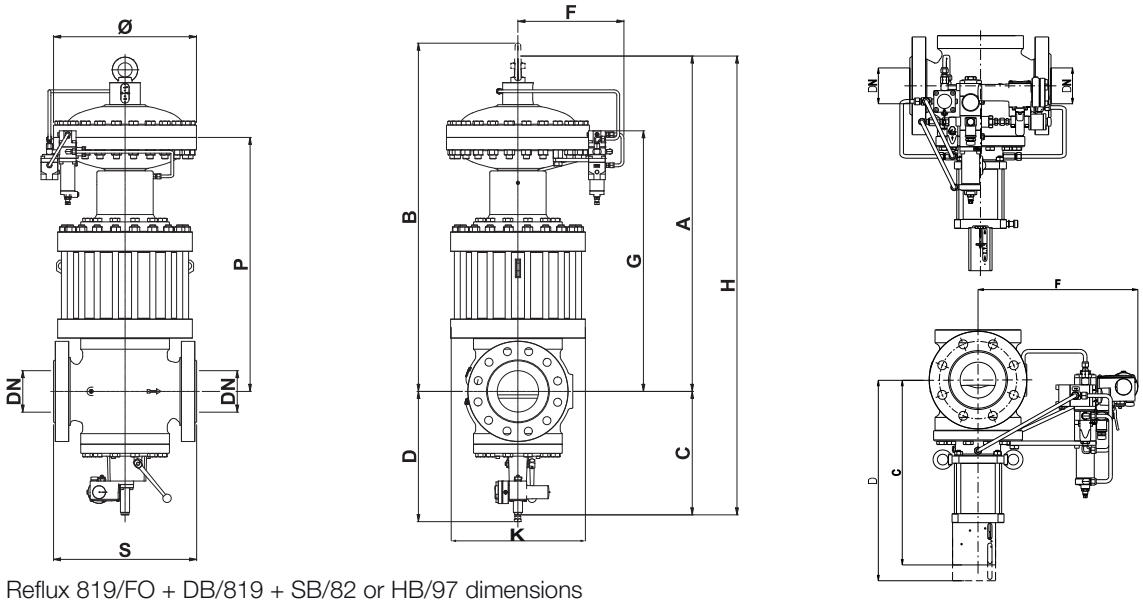

Figure 14 Reflux 819/FO + DB/819 + SB/82 or HB/97 dimensions

Weights and Dimensions (for other connections please contact your closest Pietro Fiorentini representative)								
	[mm] | inches	[mm] | inches	[mm] | inches	[mm] | inches	[mm] | inches	[mm] | inches	[mm] | inches	[mm] | inches
Size (DN)	25 | 1”	50 | 2”	80 | 3”	100 | 4”	150 | 6”	200 | 8”	250 | 10”	300 | 12”
S - ANSI 150/PN16	183 | 7.21”	254 | 10”	298 | 11.75”	352 | 13.88”	451 | 17.75”	543 | 21.38”	673 | 26.50”	737 | 29.02”
S - ANSI 300	197 | 7.75”	267 | 10.52”	317 | 12.48”	368 | 14.49”	473 | 18.62”	568 | 22.38”	708 | 27.88”	775 | 30.52”
S - ANSI 600	210 | 8.25”	286 | 11.25”	336 | 13.25”	394 | 15.52”	508 | 20.00”	609 | 23.98”	752 | 29.62”	819 | 32.25”
Ø	278 | 10.94”	278 | 10.94”	360 | 14.17”	360 | 14.17”	510 | 20.08”	510 | 20.08”	610 | 24.02”	718 | 28.27”
A	571 | 22.48”	660 | 25.98”	760 | 29.92”	842 | 33.15”	1074 | 42.28”	1222 | 48.11”	1575 | 62.01”	1640 | 64.57”
B	661 | 26.02”	725 | 28.54”	845 | 33.27”	937 | 36.89”	1259 | 49.57”	1387 | 54.61”	1775 | 69.88”	1905 | 75”
C with SB/82	215 | 8.46”	240 | 9.45”	270 | 10.63”	300 | 11.81”	375 | 14.76”	450 | 17.71”	530 | 20.87”	-
C with HB/97	-	-	-	518 | 20.39”	645 | 25.39”	687 | 27.05”	796 | 31.34”	940 | 37.01”
D with SB/82	280 | 11.02”	330 | 12.99”	380 | 14.96”	440 | 17.32”	560 | 22.05”	625 | 24.61”	730 | 28.74”	-
D with HB/97	-	-	-	650 | 25.59”	835 | 32.87”	900 | 35.43”	1060 | 41.73”	1250 | 49.21”
F	310 | 12.20”	310 | 12.20”	320 | 12.60”	320 | 12.60”	420 | 16.54”	420 | 16.54”	470 | 18.50”	-
F with HB/97	-	-	-	358 | 14.09”	410 | 16.14”	445 | 17.52”	510 | 20.08”	530 | 20.87”
G	476 | 18.74”	580 | 22.83”	675 | 26.57”	812 | 31.97”	934 | 36.77”	1032 | 40.63”	1375 | 54.13”	1355 | 53.35”
H	796 | 31.34”	900 | 35.43”	1030 | 40.55”	1142 | 44.96”	1449 | 57.05”	1672 | 65.83”	2105 | 82.87”	2580 | 101.57”
K	220 | 8.66”	300 | 11.81”	330 | 12.99”	390 | 15.35”	480 | 18.90”	595 | 23.43”	695 | 27.36”	745 | 29.33”
P	421 | 16.57”	485 | 19.09”	565 | 22.24”	617 | 24.29”	827 | 32.56”	907 | 35.71”	1275 | 50.20”	1337 | 52.64”
Tubing Connections	1/4” NPT							

Weight	Kg | lbs	Kg | lbs	Kg | lbs	Kg | lbs	Kg | lbs	Kg | lbs	Kg | lbs	Kg | lbs
ANSI 150/PN 16 with SB/82	79 | 174	136 | 300	205 | 452	274 | 604	577 | 1272	887 | 1955	1330 | 2932	-
ANSI 150/PN 16 with HB/97	-	-	-	266 | 586	569 | 1254	569 | 1254	569 | 1254	2371 | 5227
ANSI 300 with SB/82	82 | 181	139 | 306	217 | 478	304 | 670	628 | 1384	980 | 2161	1430 | 3153	-
ANSI 300 with HB/97	-	-	-	318 | 701	661 | 1457	1006 | 2218	687 | 1515	2560 | 5643
ANSI 600 with SB/82	83 | 183	141 | 311	220 | 485	313 | 690	660 | 1455	1500 | 3307	1480 | 3263	-
ANSI 600 with HB/97	-	-	-	330 | 727	687 | 1515	1022 | 2253	756 | 1667	2646 | 5833

Table 35 Weights and dimensions

Reflux 819/FO + DB/819 + PM/819

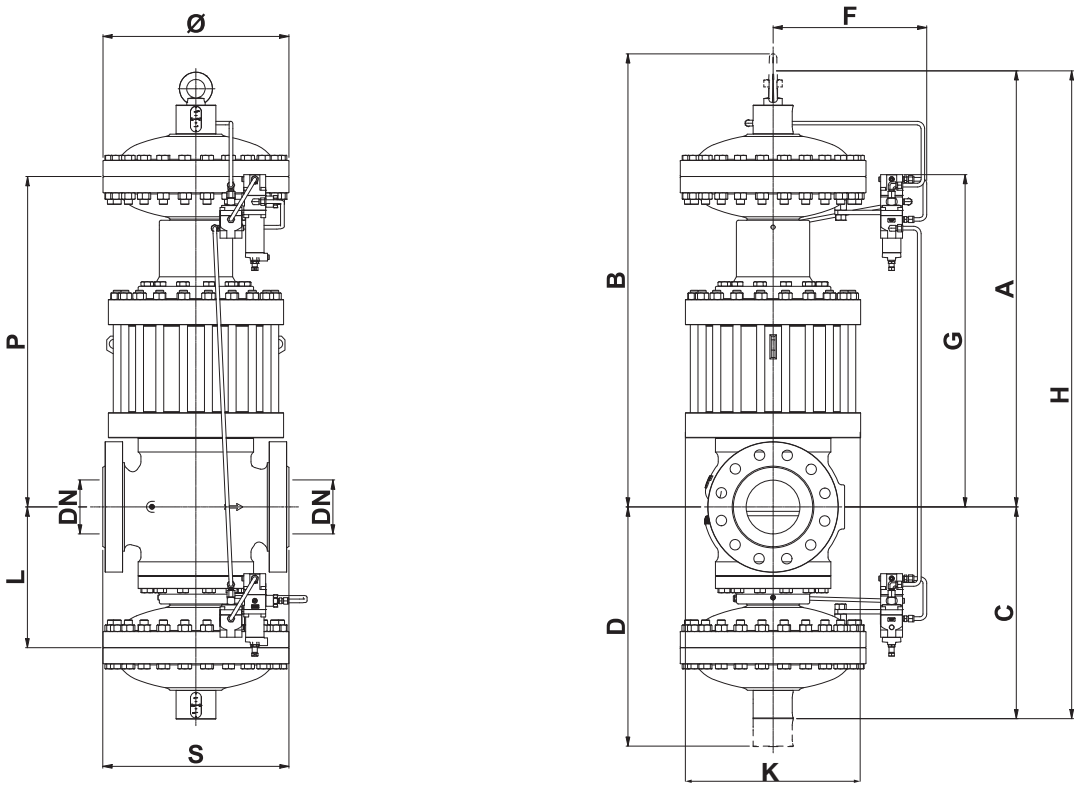

Figure 15 Reflux 819/FO + DB/819 + PM/819 dimensions

Weights and Dimensions (for other connections please contact your closest Pietro Fiorentini representative)							
	[mm] | inches	[mm] | inches	[mm] | inches	[mm] | inches	[mm] | inches	[mm] | inches	[mm] | inches
Size (DN)	25 | 1”	50 | 2”	80 | 3”	100 | 4”	150 | 6”	200 | 8”	250 | 10”
S - ANSI 150/PN16	183 | 7.21”	254 | 10”	298 | 11.75”	352 | 13.88”	451 | 17.75”	543 | 21.38”	673 | 26.50”
S - ANSI 300	197 | 7.75”	267 | 10.52”	317 | 12.48”	368 | 14.49”	473 | 18.62”	568 | 22.38”	708 | 27.88”
S - ANSI 600	210 | 8.25”	286 | 11.25”	336 | 13.25”	394 | 15.52”	508 | 20.00”	609 | 23.98”	752 | 29.62”
Ø	278 | 10.94”	278 | 10.94”	360 | 14.17”	360 | 14.17”	510 | 20.08”	510 | 20.08”	610 | 24.02”
A	571 | 22.48”	660 | 25.98”	760 | 29.92”	842 | 33.15”	1074 | 42.28”	1222 | 48.11”	1575 | 62.01”
B	661 | 26.02”	725 | 28.54”	845 | 33.27”	937 | 36.89”	1259 | 49.57”	1387 | 54.61”	1775 | 69.88”
C	320 | 12.60”	350 | 13.78”	430 | 16.93”	490 | 19.29”	650 | 25.59”	750 | 29.53”	800 | 31.50”
D	410 | 16.14”	430 | 16.93”	530 | 20.87”	600 | 23.62”	735 | 28.94”	850 | 33.64”	900 | 35.43”
F	310 | 12.20”	310 | 12.20”	320 | 12.60”	320 | 12.60”	420 | 16.54”	420 | 16.54”	470 | 18.50”
G	476 | 18.74”	580 | 22.83”	675 | 26.57”	812 | 31.97”	934 | 36.77”	1032 | 40.63”	1375 | 54.13”
H	891 | 35.08”	1010 | 39.76”	1195 | 47.05”	1332 | 52.44”	1724 | 67.87”	1972 | 77.64”	2375 | 93.50”
K	220 | 8.66”	300 | 11.81”	330 | 12.99”	390 | 15.35”	480 | 18.90”	595 | 23.43”	695 | 27.36”
L	221 | 8.70”	200 | 7.87”	260 | 10.24”	290 | 11.42”	320 | 12.60”	370 | 14.57”	500 | 19.69”
P	421 | 16.57”	485 | 19.09”	320 | 12.60”	617 | 24.29”	827 | 32.56”	907 | 35.71”	1275 | 50.20”
Tubing Connections	1/4” NPT						

Weight	Kg | lbs	Kg | lbs	Kg | lbs	Kg | lbs	Kg | lbs	Kg | lbs	Kg | lbs
ANSI 150/PN 16	110 | 242	170 | 375	270 | 595	359 | 791	774 | 1706	1097 | 2418	1780 | 3924
ANSI 300	112 | 247	172 | 379	267 | 588	388 | 855	783 | 1726	1185 | 2612	1880 | 4145
ANSI 600	113 | 249	174 | 383	270 | 595	397 | 875	815 | 1797	1210 | 2668	1930 | 4254

Table 36 Weights and dimensions

Sizing and Cg

In general, the choice of a regulator is made based on the calculation of the flow rate determined by using the flow rate coefficients (Cg) and the form factor (K1) as indicated by the EN 334 standard.

Flow rate coefficient								
Nominal size	25	50	80	100	150	200	250	300
Inches	1”	2”	3”	4”	6”	8”	10”	12”
Cg	575	2220	4937	8000	16607	25933	36525	55000
K1	106.78	106.78	106.78	106.78	106.78	106.78	106.78	106.78

Table 37 Flow rate coefficient

For sizing **PRESS HERE** or use the QR code:

Note: In case you do not have the proper credentials to access, feel free to contact your closest Pietro Fiorentini representative.

In general the online sizing considers multiple variables as the regulator is installed in a system, enabling a better and multiperspective approach to the sizing.

For different gases, and for natural gas with a different relative density other than 0.61 (compared to air), the correction coefficients from the following formula shall be applied.

$$F_c = \sqrt{\frac{175.8}{S \times (273.16 + T)}}$$

S = relative density (refer to Table 38)
T = gas temperature (°C)

$$F_c = \sqrt{\frac{316.44}{S \times (459.67 + T)}}$$

S = relative density (refer to Table 38)
T = gas temperature (°F)

Correction Factor Fc		
Gas Type	**Relative Density S**	**Correction Factor Fc**
Air	1.00	0.78
Propane	1.53	0.63
Butane	2.00	0.55
Nitrogen	0.97	0.79
Oxygen	1.14	0.73
Carbon Dioxide	1.52	0.63
Note: the table shows the Fc correction factors valid for Gas, calculated at a temperature of 15°C and at the declared relative density.		

Table 38 Correction Factor Fc

Flow rate conversion
Stm^3/h x 0.94795 = Nm^3/h

Nm^3/h reference conditions T= 0 °C; P= 1 barg
Stm^3/h reference conditions T= 15 °C; P= 1 barg

Table 39 Flow rate conversion

CAUTION:

In order to get optimal performance, to avoid premature erosion phenomena and to limit noise emissions, it is recommended to check the gas speed, and its compliance with local practice and regulations. The gas speed at the outlet flange may be calculated by means of the following formula:

$$V = 345.92 \times \frac{Q}{DN^2} \times \frac{1 - 0.002 \times Pd}{1 + Pd}$$

V = gas speed in m/s
Q = gas flow rate in Stm^3/h
DN = nominal size of regular in mm
Pd = outlet pressure in barg

$$V = 0.0498 \times \frac{Q}{DN^2} \times \frac{14.504 - 0.002 \times Pd}{14.504 + Pd}$$

V = gas speed in ft/s
Q = gas flow rate in Scfh
DN = nominal size of regular in inches
Pd = outlet pressure in psi

Sizing of regulators is usually made based on valve Cg value (Table 37).

Flow rates at fully open position and various operating conditions are related by the following formulae where:

Q = flow rate in Scf/h
Pu = inlet pressure in psia
Pd = outlet pressure in psia

- **A** > when the Cg value of the regulator is known, as well as Pu and Pd, the flow rate can be calculated as follows:

- **A-1** in sub critical conditions: (Pu < 2 x Pd)

$$Q = 0.216 \times Cg \times Pu \times \sin\left(K1 \times \sqrt{\frac{Pu - Pd}{Pu}}\right)$$

- **A-2** in critical conditions: (Pu ≥ 2 x Pd)

$$Q = 0.216 \times Cg \times Pu$$

- **B** > vice versa, when the values of Pu, Pd and Q are known, the Cg value, and hence the regulator size, may be calculated using:

- **B-1** in sub-critical conditions: (Pu < 2xPd)

$$Cg = \frac{Q}{0.216 \times Pu \times \sin\left(K1 \times \sqrt{\frac{Pu - Pd}{Pu}}\right)}$$

- **B-2** in critical conditions (Pu ≥ 2 x Pd)

$$Cg = \frac{Q}{0.216 \times Pu}$$

NOTE: The sin value is understood to be DEG.

Installations

Here below, at glance, are some typical installations by application and geographical location. On demand we are available to supply a more comprehensive experience list and/or references.

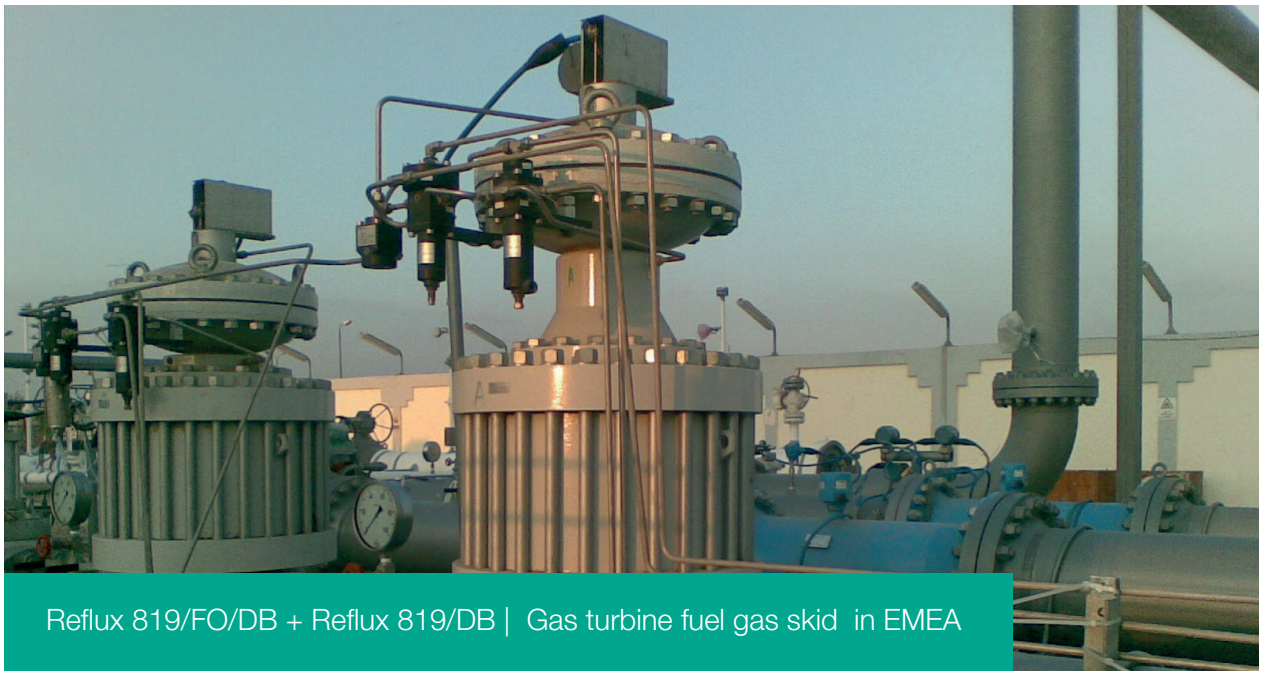

Reflux 819/FO/DB + Reflux 819/DB | Gas turbine fuel gas skid in EMEA

Reflux 819/FO/DB worker + Reflux 819/DB Monitor + HBC 975 slam shut
Gas turbine fuel gas skid in EMEA

Customer Centricity

Customer centricity is a way of running your business — implementing a perfect customer experience at each stage of the pipeline. Pietro Fiorentini is one of the main Italian international company with high focus on product and service quality.

The main strategy is to create a stable, long-term relationship, putting the customer's needs first. Lean management and customer centricity are used to improve and maintain the highest level of customer experience.

Support

Pietro Fiorentini's top priority is to provide support to the client in all phases of project development, during installation, start up and operation. Pietro Fiorentini has developed a highly standardized Intervention-Management-System (IMS), which helps to facilitate the entire process and putting the customer at the forefront of every decision in our process while manufacturing or developing a product to help improve the product and service. With our IMS business model many services are available remotely, avoiding long waiting times, improving service, and avoiding unnecessary expenses.

Training

Pietro Fiorentini offers training services available for both experienced operators and new customers. The training is offered for all levels of our customers which can include one or all of the following: sizing of equipment, application, installation, operation, maintenance and is prepared according to the level of use and the customer's need.

Customer Relation Management (CRM)

The service and care of our customers are one of the main missions and vision of Pietro Fiorentini. For this reason, Pietro Fiorentini has enhanced the customer relation management system. This enables us to track every opportunity and request from our customers into one single information point and allows us to coordinate information allowing us to give the customer improved service.

Pietro Fiorentini

TB0006USA

The data is not binding. We reserve the right to make changes without prior notice.

reflux819fo_technicalbrochure_USA_revE

www.fiorentini-usa.com