Pietro Fiorentini

Reflux 819

High Medium Pressure Gas Regulator

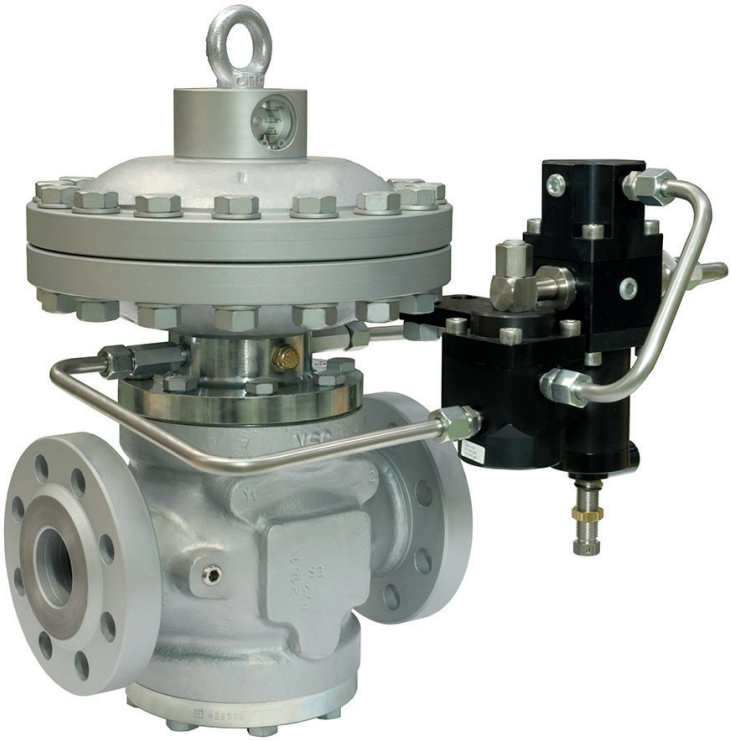

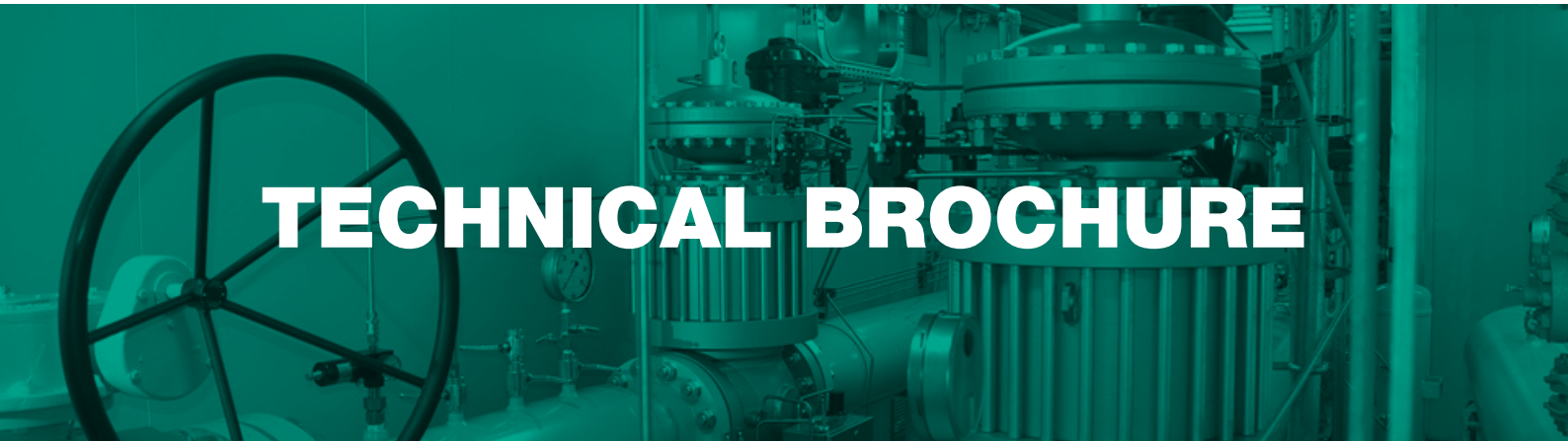

Pietro Fiorentini S.p.A.
Via E.Fermi, 8/10 | 36057 Arcugnano, Italy | +39 0444 968 511
sales@fiorentini.com

The data are not binding. We reserve the right
to make changes without prior notice.

reflux819_technicalbrochure_ENG_revH

www.fiorentini.com

Who we are

We are a global organization specialized in designing and manufacturing technologically advanced solutions for natural gas treatment, transmission and distribution systems.

We are the ideal partner for operators in the Oil & Gas sector, with a business offer that goes across the whole natural gas chain.

We are in constant evolution to meet our customers' highest expectations in terms of quality and reliability.

Our aim is to be a step ahead of the competition, with customized technologies and an after-sale service program undertaken with the highest grade of professionalism.

Pietro Fiorentini advantages

- Localised technical support
- Experience since 1940
- We operate in over 100 countries

Area of Application

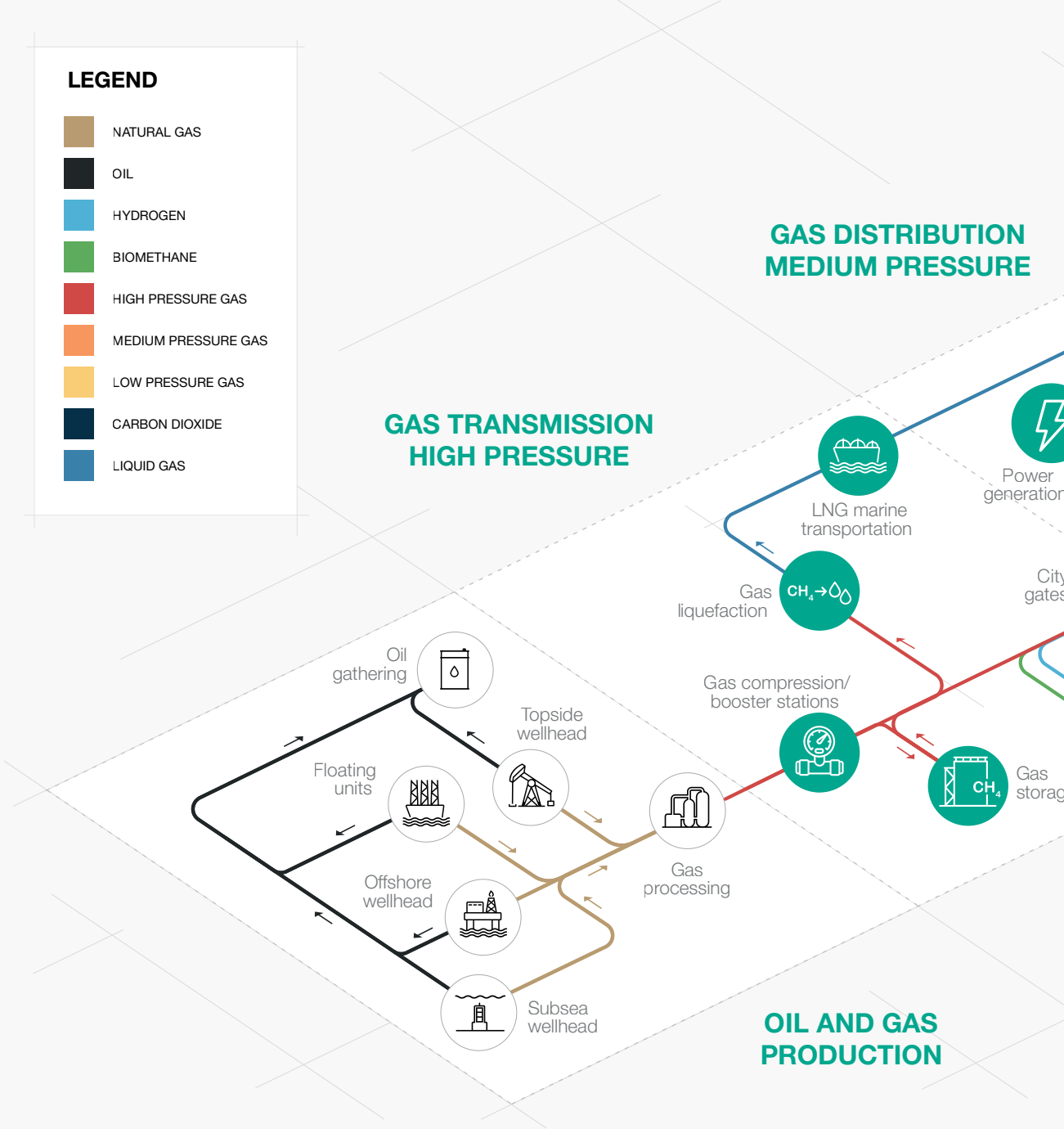

Green icon indicates the application where this product is suitable for

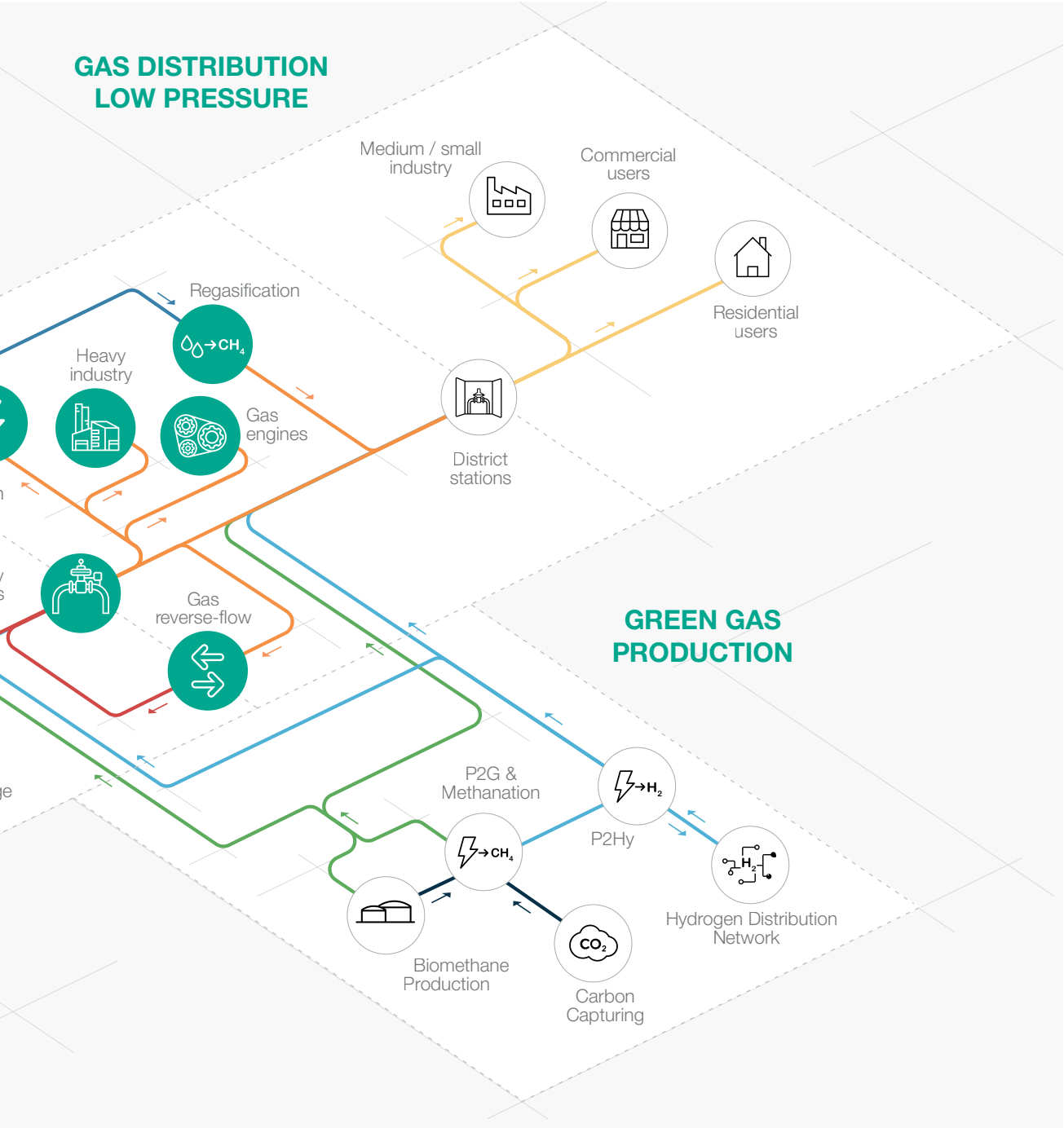

Figure 1 Area of Application Map

Introduction

Reflux 819 is one of the **pilot-operated gas pressure regulators** designed and manufactured by Pietro Fiorentini.

This device is suitable for use with previously filtered non-corrosive gases, and it is mainly used for high-pressure transmission systems, power plants and for medium pressure natural gas distribution networks.

According to the European Standard EN 334, it is classified as Fail Close (pilot series 200/A) or Fail Open (pilot series 210/A) according to the installed pilot (except for the PM819 monitor).

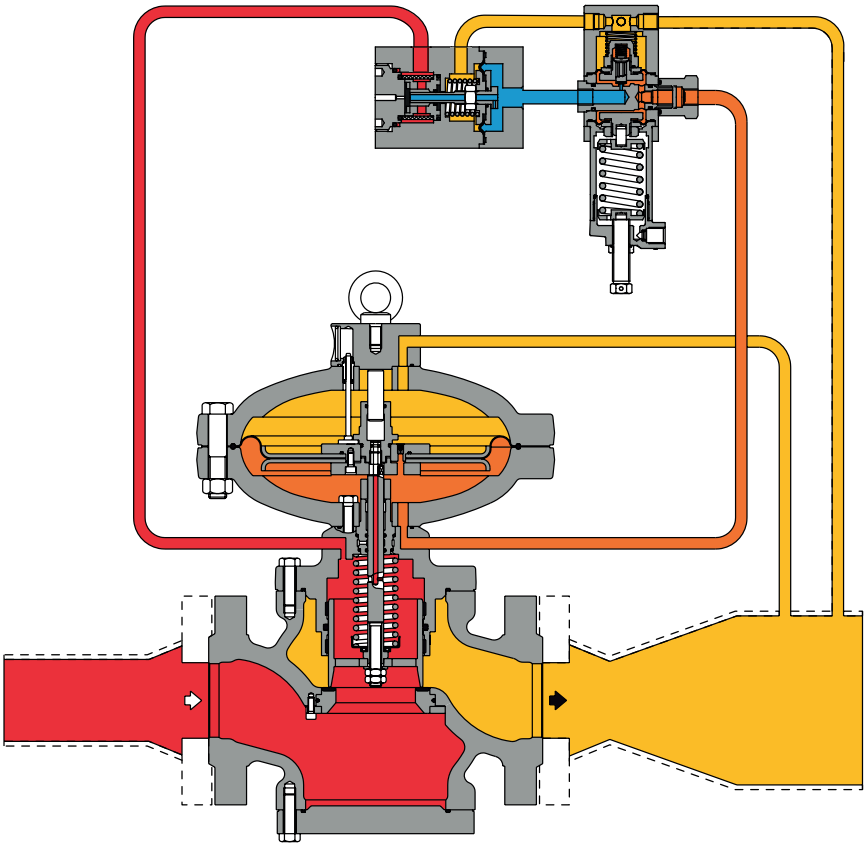

Inlet pressure

Outlet pressure

Motorisation

Feeding pressure for pilot system

Figure 2 Reflux 819

Features and Calibration ranges

Reflux 819 is a **pilot-operated** device for high pressure and medium pressure with an unique **dynamic balancing system** which ensures an **outstanding turn down ratio** combined with an extremely **accurate outlet pressure control.**

Reflux 819 is a balanced pressure regulator. This means that the controlled outlet pressure is not affected by variations in the inlet pressure and flow during its operation. Therefore a balanced regulator can have a single-size orifice for all pressure and flow conditions.

This regulator is suitable for use with previously filtered, non corrosive gases, in natural gas transmission, power plants fuel gas skids and distribution networks as well as high load industrial applications.

It is a **truly top entry design** which allows an **easy maintenance** of parts directly in the field **without removing the body from the pipework.**
Set point adjustment of the regulator is achieved via a pilot, loading and unloading the pressure in the upper diaphragm chamber.

The modular design of Reflux pressure regulators allows for the factory (or retro-site fitting) of an emergency monitor regulator PM/819 or a slamshut valve SB/82 or HB/97 (depending on size). Additionally an integral silencer DB819 can be installed. All without removing the body from the pipeline.

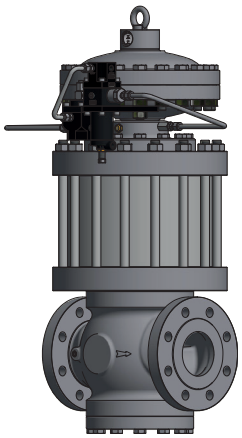

Figure 3 Reflux 819 with silencer DB/819

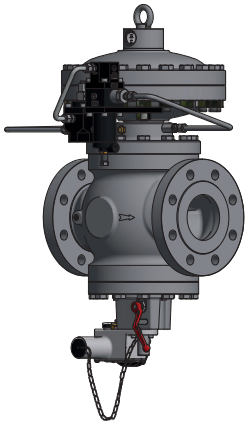

Figure 4 Reflux 819 with SB/82

Reflux 819 competitive advantages

- Compact and simple design
- High accuracy
- 1:1000 High turn-down ratio
- Fail Close or Fail open plug and seat regulator
- Built-in pilot filter
- Top Entry
- Easy maintenance
- Built-in accessories
- Biomethane compatible and available with specific versions for full Hydrogen or blending
- Balanced type

Features

Features	Values	
Design pressure* (PS[1] / DP[2])	up to 10.2 MPa up to 102 barg	
Ambient temperature* (TS[1])**	**Standard version** from -20 °C to +60 °C from -4 °F to +140 °F	**Arctic version** from -40 °C to +60 °C from -40 °F to +140 °F
Inlet gas temperature*,***	**Standard version** from -10 °C to +60 °C from +14 °F to +140 °F	**Arctic version** from -20 °C to +60 °C from -4 °F to +140 °F
Inlet pressure (MAOP / p_{umax}[1])	from 0.08 to 10.0 MPa from 0.8 to 100 barg	
Range of downstream pressure (Wd[1])	from 0.03 to 7.4 MPa from 0.3 to 74 barg	
Available accessories	DB/819 Silencer, LDB/171 Silencer, PM/819 Monitor, SB/82 Slam shut, HB/97 Slam shut	
Minimum operating differential pressure (Δp_{min}[1])	0.05 MPa | 0.5 barg	
Accuracy class (AC[1])	up to 1	
Lock-up pressure class (SG[1])	up to 2.5	
Nominal size (DN[1,2])	DN 25 / 1”; DN 50 / 2”; DN 80 / 3”; DN 100 / 4”; DN 150 / 6”; DN 200 / 8”; DN 250 / 10”; DN 300 / 12”	
Connections	Class 150, 300, 600 RF or RTJ according to ASME B16.5 and PN16 according to ISO 7005	

([1]) according to EN334 standard
([2]) according to ISO 23555-1 standard
(*) NOTE: Different functional features and/or extended temperature ranges may be available on request. Stated inlet gas temperature range is the maximum for which the equipment’s full performance, including accuracy is guaranteed. Product may have a different pressure or temperature ranges according to the version and/or installed accessories.
(**) NOTE: Stated temperature range is the operating range for which the equipment’s mechanical resistance and leakage rate are guaranteed. Some body materials, if multiple choices are available, may not be suitable for all the available versions shown.
(***) NOTE: Stated temperature range is the range for which the equipment’s full performance, including accuracy and lock-up are guaranteed. Some body materials, if multiple choices are available, may not be suitable for all the available versions shown.

Table 1 Features

Materials and Approvals

Part	Material
Body	ASTM A 352 LCC cast steel for classes ANSI 600 and 300; ASTM A 216 WCB cast steel for classes ANSI 150 and PN 16/40
Heads	ASTM A 350 LF2 steel
Stem	AISI 416 stainless steel
Plug	ASTM A 350 LF2 nickel-plated steel
Seat	Vulcanized Nitrile Rubber on metal support
Diaphragm	Rubberised Canvas (pre-formed by hot-pressing process)
O-rings	Nitrile Rubber
Compression fittings	Made of zync-plated steel according to DIN 2353; on request, stainless steel
NOTE: The materials indicated above refer to the standard models. Different materials can be provided according to specific needs.	

Table 2 Materials

Construction Standards and Approvals

Reflux 819 regulator is designed according to European standard EN 334.
The regulator reacts in closing (Fail Close) or opening (Fail Open) according to EN 334 depending on the pilot installed.

The product is certified according to European Directive 2014/68/EU (PED).
Leakage class: bubble tight, better than VIII according to ANSI/FCI 70-3.

EN 334 PED-CE

Pilot ranges and types

Type	Model	Operation	Range Wh		Spring Table web link
			MPa	barg	
Main pilot	204/A	Manual	0.03 - 4.3	0.3 - 43	TT 433
Main pilot	205/A	Manual	2 - 6	20 - 60	TT 799
Main pilot	207/A	Manual	4.1 - 7.4	41 - 74	TT 1146
Main pilot	214/A	Manual	0.03 - 4.3	0.3 - 43	TT 433
Main pilot	215/A	Manual	2 - 6	20 - 60	TT 799
Main pilot	217/A*	Manual	4.1 - 7.4	41 - 74	TT 1146

* Pending

Table 3 Settings table

Pilot adjustment	
Pilot type .../A	Manual setting
Pilot type .../D	Electric remote control setting
Pilot type .../CS	Pneumatic remote control setting
Pilot type .../MP	Magnetic pilot for remote control setting / flow limitation

Table 4 Pilot adjustment table

General link to the calibration tables: **PRESS HERE** or use the QR code:

Accessories

For the pressure regulators:

- Cg limiter
- Limit switches
- Position transmitter
- Silencer
- Slam shut valve
- Monitor

For the pilot circuit:

- R14/A/S preregulator for the high pressure circuit (differential pressure > 3.5 MPa | 35 barg)
- Heating cable for preheating pilot circuit
- Electrical heater PPH200
- Supplementary filter CF14 or CF14/D
- ESD filter CF/5/S
- ATF 15 antifreeze

In-line Monitor

The in-line monitor is generally installed upstream of the active regulator.
Although the function of the monitor regulator is different, the two regulators are virtually identical from the point of view of their mechanical components.
The only difference is that the monitor is set at a higher pressure than active regulator.
The Cg coefficient of the active regulator is the same, however during the sizing process, the differential pressure drop generated by the fully open in-line monitor shall be considered.
As a general practise to incorporate this effect, a 20% reduction of the Active regulator's Cg value can be applied.

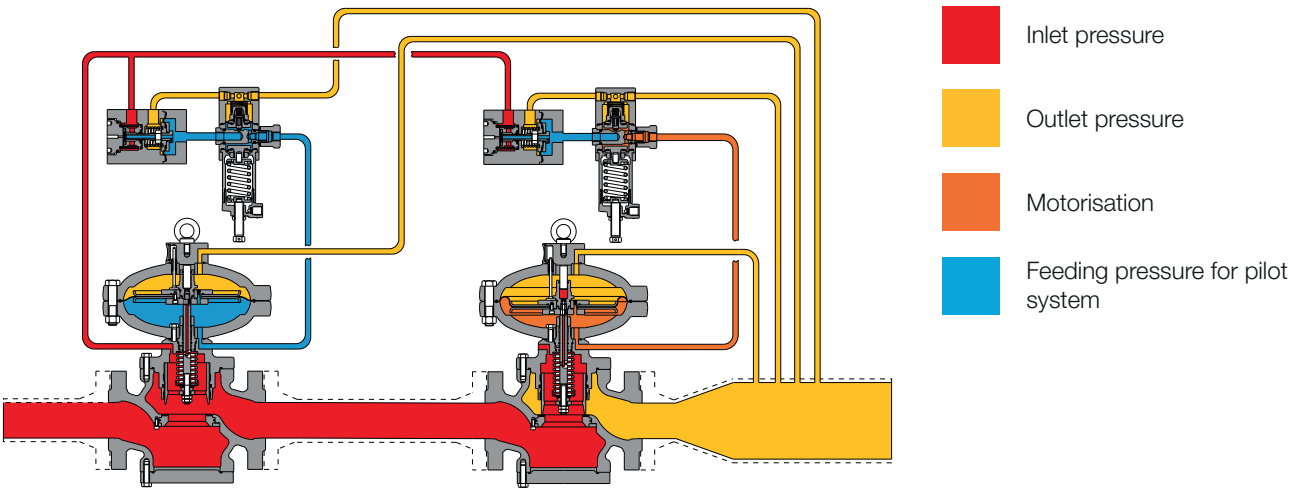

Figure 5 Reflux 819 inline monitor

PM/819 monitor

This emergency regulator (monitor) is directly integrated onto the body of the main regulator. Both pressure regulators, therefore, use the same valve body, although they have independent actuators, pilots and valve seats.

The monitor is in the fully open position during normal operation of the active regulator and takes over on in the event of its failure.

The operational characteristics of the PM/819 monitor are the same as the Reflux 819 regulator (refer to that specific catalogue).

The Cg coefficients of regulator having an incorporated monitor is 5% lower than those for standard version.

This solution allows the construction of pressure reduction lines with compact dimensions.

Another great advantage offered by the incorporated monitor regulator is that **it can be installed at any time**, even on an existing regulator, **without major changes to the pipeline.**

- Compact dimensions
- Completely independent
- Fail to close action
- Built-in pilot's filter
- Visual opening indicator
- Easy maintenance
- Limit switch option
- Accelerating valve option

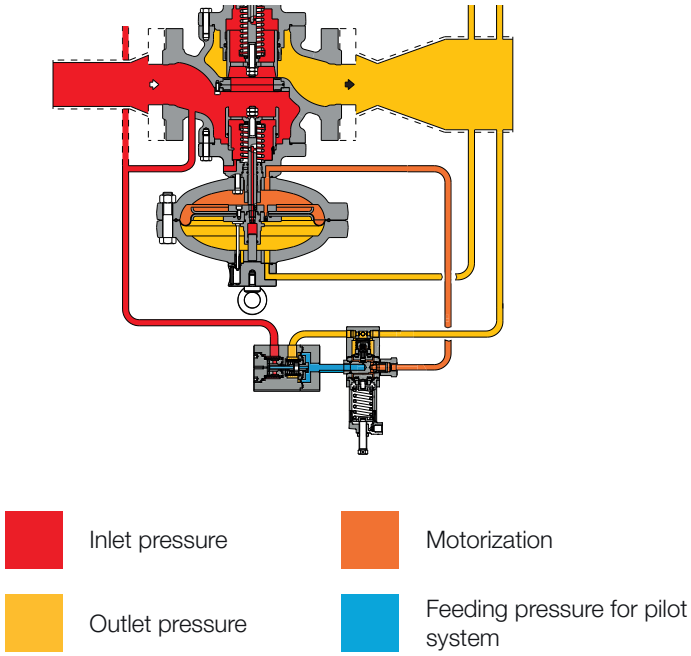

Figure 6 Reflux 819 with PM/819

Type	Model	Operation	Range Wh		Spring Table web link
			MPa	barg	
Main pilot	204/A	Manual	0.03 - 4.3	0.3 - 43	TT 433
Main pilot	205/A	Manual	2 - 6	20 - 60	TT 799
Main pilot	207/A	Manual	4.1 - 7.4	41 - 74	TT 1146

Table 5 Settings table

Types of pilot adjustment	
Pilot type .../A	Manual setting
Pilot type .../D	Electric remote control setting
Pilot type .../CS	Pneumatic remote control setting
Pilot type .../MP	Magnetic pilot for remote control setting / flow limitation

Table 6 Pilot adjustment table

The monitor regulator can be equipped with an additional pilot called “Accelerating valve” to enable a quick response time during the monitor take over. According to PED the Accelerating valve is required on the monitor when acting as a safety accessory.

Type	Model	Operation	Range Wh		Spring Table web link
			MPa	barg	
Accelerating valve	M/A	Manual	0.03 - 2	0.3 - 20	TT 354
Accelerating valve	M/A1	Manual	2 - 6.3	20 - 63	TT 892
Accelerating valve	M/A2	Manual	4 - 7.5	40 - 75	TT 892

Table 7 Accelerating valve adjustment table

General link to the calibration tables: **PRESS HERE** or use the QR code:

DB/819 silencer

Whenever certain noise limit is desired, an additional silencer allows to considerably reduce the noise level (dBA).

Reflux 819 pressure regulator can be supplied with an **incorporated silencer** in either the standard version or version with incorporated slam shut or monitor regulator.

The high efficiency noise absorption takes place at the point where the noise is generated, thus preventing its propagation.

With the built-in silencer, the Cg valve coefficient is 5% lower than the corresponding version without.

Given the modular arrangement of the regulator, the silencer may be retrofitted to both standard Reflux 819 version as well as those with incorporated slam shut or monitor, **without modifying the main piping**.
Pressure reduction and control operate the same manner as standard version.

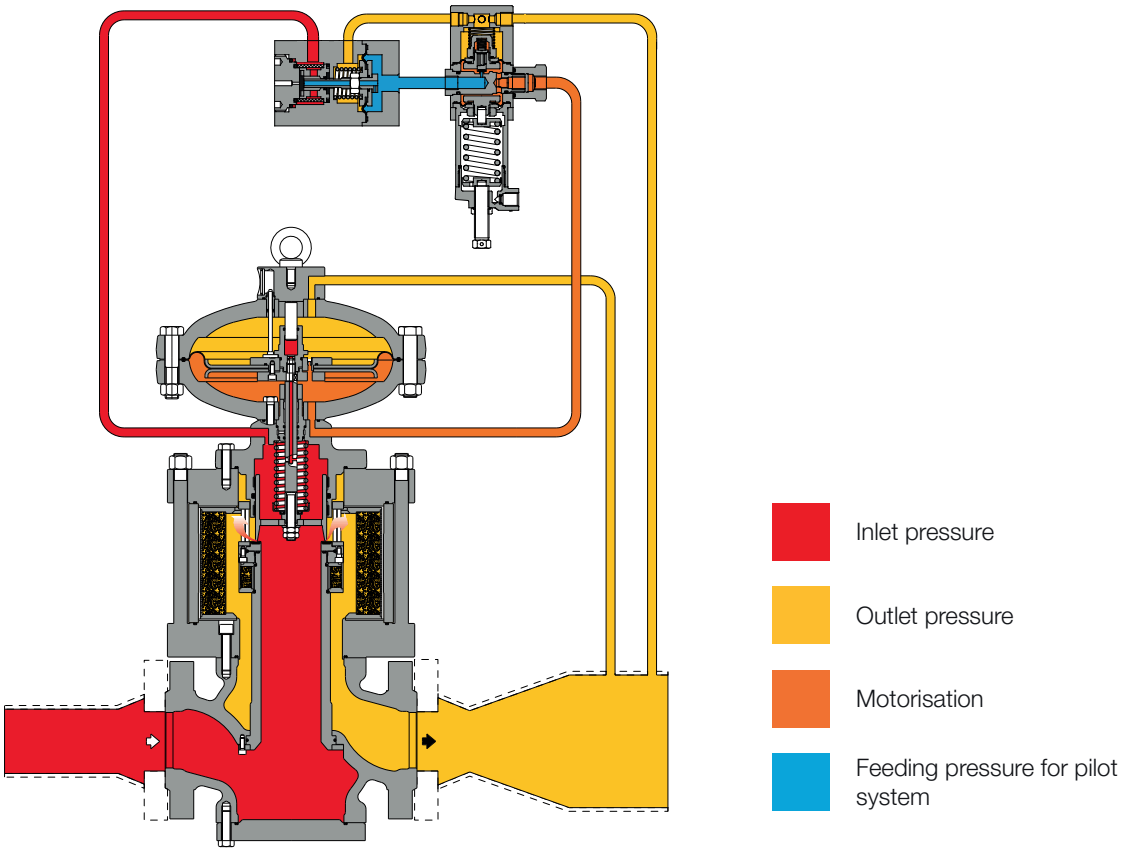

Figure 7 Reflux 819 with DB/819 silencer

The charts below represent the silencer effectiveness based on some common reference conditions for 2”, 4”and 6”. For actual calculations at specific desired conditions please refer to the online sizing tool or contact your closest Pietro Fiorentini representative.

- Pd 0.4 MPa | 4 barg NO Silencer
- Pd 2 MPa | 20 barg NO SILENCER
- Pd 4 MPa | 40 barg NO Silencer
- Recommended noise limit (85 dBA at 1 mt | 3 feet)
- Pd 0.4 MPa | 4 barg DB/819
- Pd 2 MPa | 20 barg DB/819
- Pd 4 MPa | 40 barg DB/819

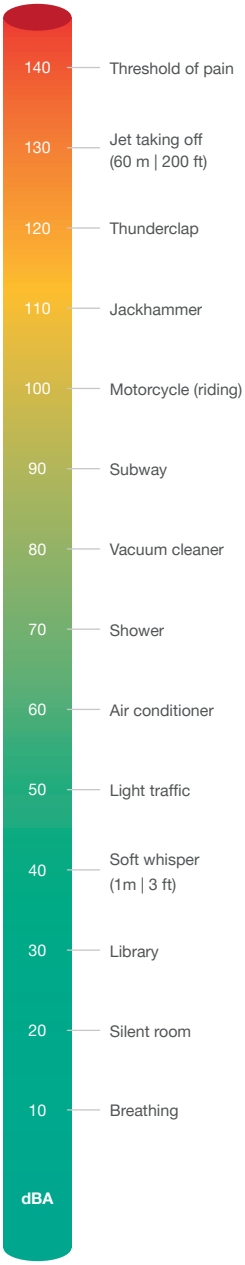

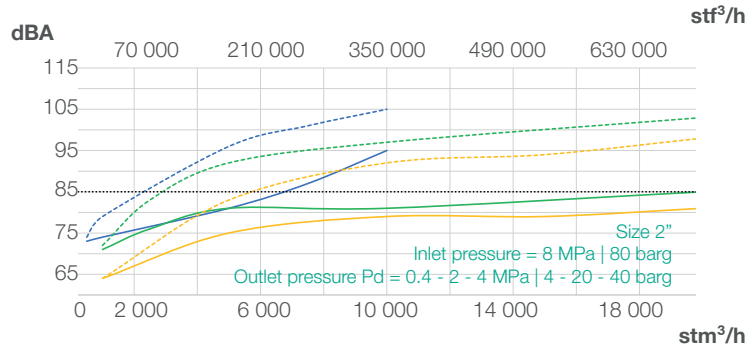

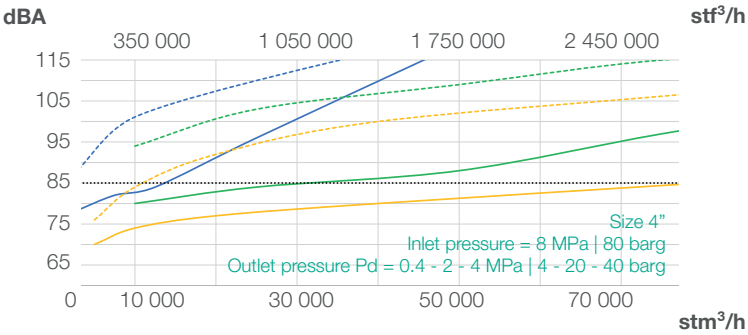

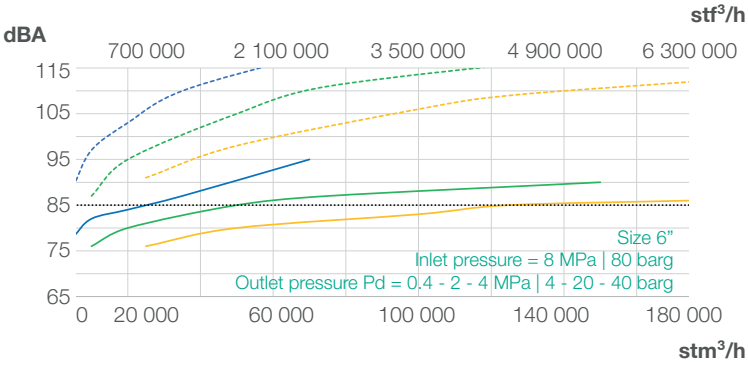

Chart 1 Reflux 819’s silencer efficiency charts

SB/82 or HB/97 slam shut

Reflux 819 pressure regulator offers the possibility of installing an **SB/82 or HB/97 incorporated slam shut valve**, depending on the regulator size, and this can be done either during the manufacturing process or be retrofitted in the field.

SB/82 is available for all sizes, while HB/97 is available from 4” to 12” only.

Retrofitting can be done without modifying the pressure regulator assembly.
With the built-in slam shut, the Cg valve coefficients is 5% lower than the corresponding version without.

The main characteristics of this device are:

- OPSO — Over Pressure Shut-Off
- UPSO — Under Pressure Shut-Off
- Internal by-pass
- Push botton for tripping test
- Compact dimensions
- Easy maintenance
- Remote tripping option
- Limit switch option

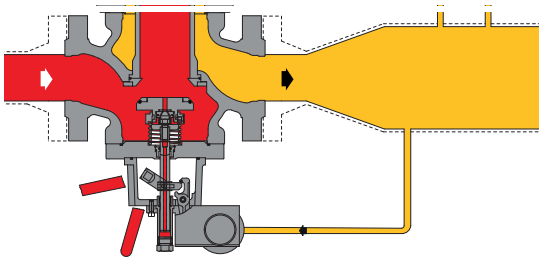

Figure 8 Reflux 819 with SB/82

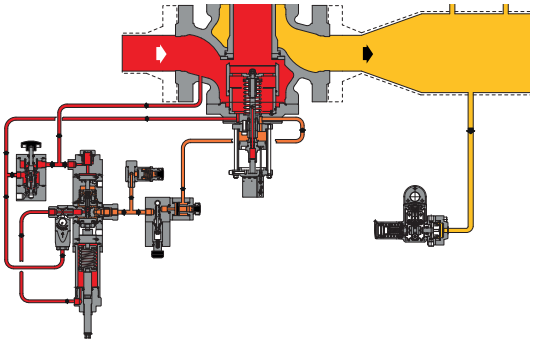

Figure 9 Reflux 819 with HB/97

Inlet pressure — Motorisation — Outlet pressure

Pressure switch types and ranges					
SSV Type	**Model**	**Operation**	**Range Wh**		**Spring Table web link**
			MPa	**barg**	
SB/82	102M	OPSO	0.02 - 0.55	0.2 - 5.5	TT 1331
		UPSO	0.02 - 0.28	0.2 - 2.8	
SB/82	102MH	OPSO	0.02 - 0.55	0.2 - 5.5	TT 1331
		UPSO	0.28 - 0.55	2.8 - 5.5	
SB/82	103M	OPSO	0.2 - 2.2	2 - 22	TT 1331
		UPSO	0.02 - 0.8	0.2 - 8	
SB/82	103MH	OPSO	0.2 - 2.2	2 - 22	TT 1331
		UPSO	0.8 - 1.9	8 - 19	
SB/82	104M	OPSO	1.5 - 4.5	15 - 45	TT 1331
		UPSO	0.16 - 1.8	1.6 - 18	
SB/82	104MH	OPSO	1.5 - 4.5	15 - 45	TT 1331
		UPSO	1.8 - 4.1	18 - 41	
SB/82	105M	OPSO	3 - 9	30 - 90	TT 1331
		UPSO	0.3 -4.4	3 - 44	
SB/82	105MH	OPSO	3 - 9	30 - 90	TT 1331
		UPSO	4.4 - 9	44 - 90	
HB/97	102M	OPSO	0.02 - 0.55	0.2 - 5.5	TT 1331
		UPSO	0.02 - 0.28	0.2 - 2.8	
HB/97	102MH	OPSO	0.02 - 0.55	0.2 - 5.5	TT 1331
		UPSO	0.28 - 0.55	2.8 - 5.5	
HB/97	103M	OPSO	0.2 - 2.2	2 - 22	TT 1331
		UPSO	0.02 - 0.8	0.2 - 8	
HB/97	103MH	OPSO	0.2 - 2.2	2 - 22	TT 1331
		UPSO	0.8 - 1.9	8 - 19	
HB/97	104M	OPSO	1.5 - 4.5	15 - 45	TT 1331
		UPSO	0.16 - 1.8	1.6 - 18	
HB/97	104MH	OPSO	1.5 - 4.5	15 - 45	TT 1331
		UPSO	1.8 - 4.1	18 - 41	
HB/97	105M	OPSO	3 - 9	30 - 90	TT 1331
		UPSO	0.3 -4.4	3 - 44	
HB/97	105MH	OPSO	3 - 9	30 - 90	TT 1331
		UPSO	4.4 - 9	44 - 90	

Table 8 Settings table

Pilot series 210 fail to open (optional)

The pilot series 210/A is a mechanical device which enables the working principle and the setpoint modifications of pilot operated gas pressure regulators. The pilot is optimized to enhance the accuracy and minimize the lock-up.

This model specifically allow to have a **fail-to-open regulator in case of pilot's failure**.

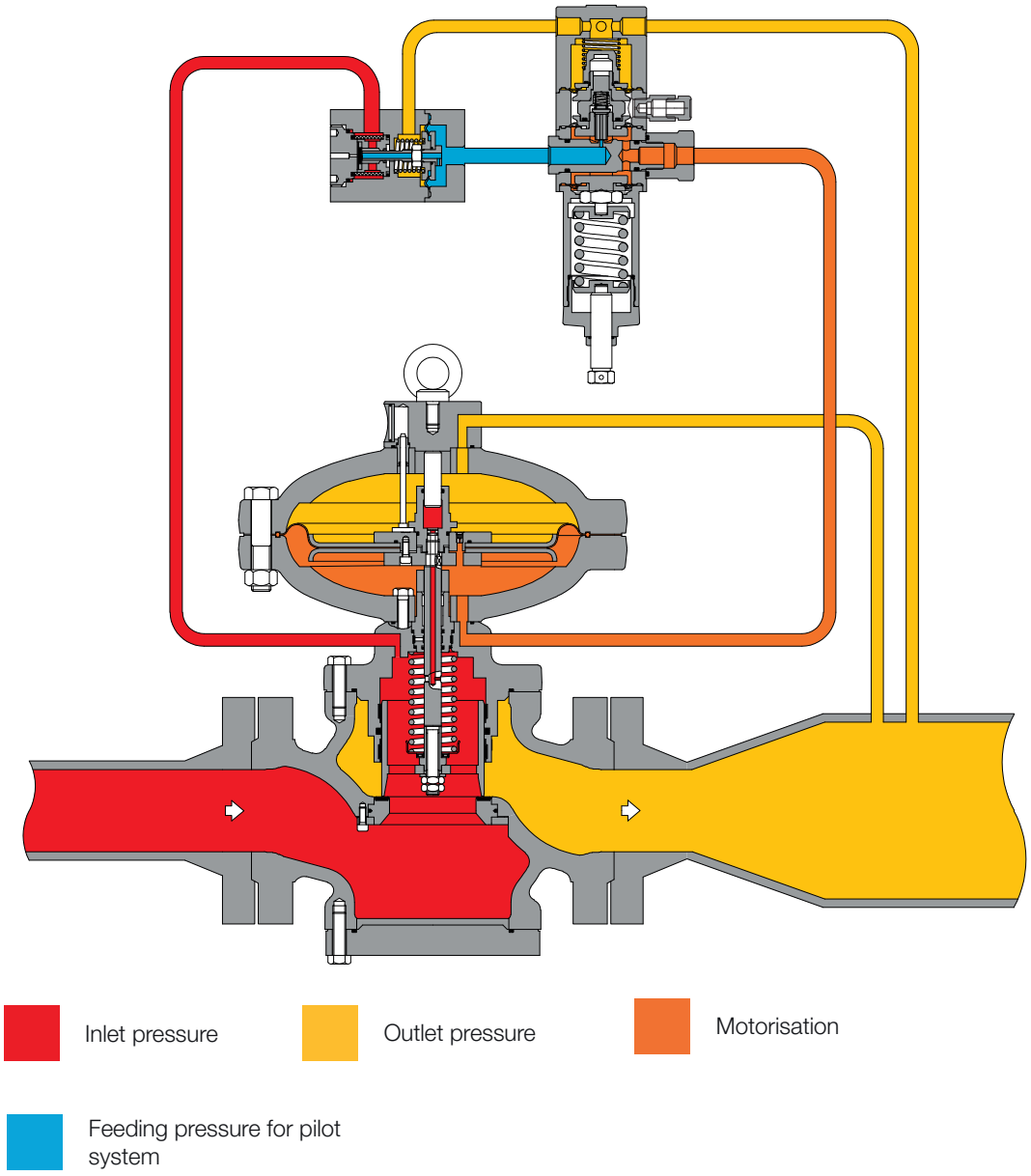

Figure 10 Reflux 819 with fail to open pilot series 210

Weights and Dimensions

Reflux 819

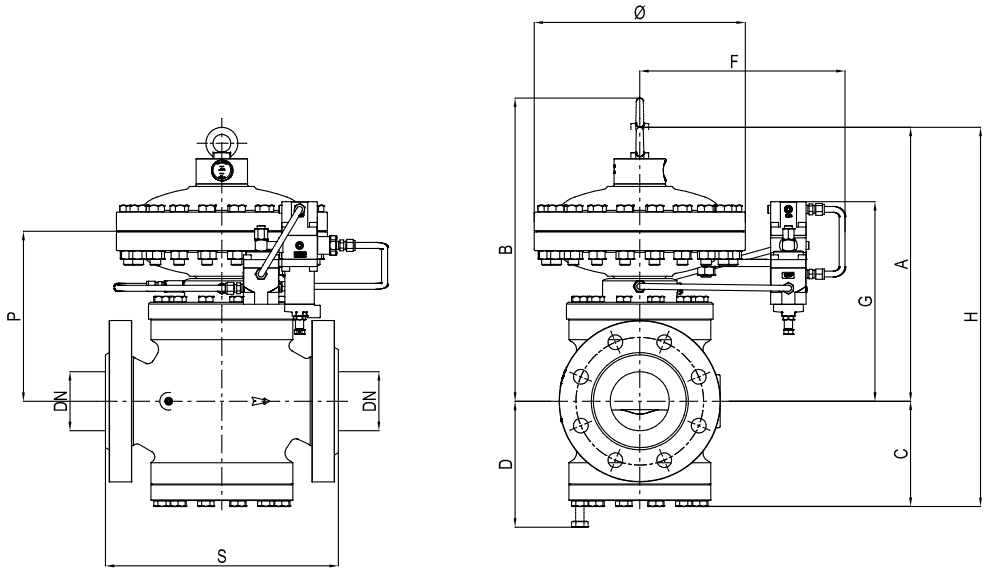

Figure 11 Reflux 819 dimensions

Weights and Dimensions (for other connections please contact your closest Pietro Fiorentini representative)								
	[mm] | inches	[mm] | inches	[mm] | inches	[mm] | inches	[mm] | inches	[mm] | inches	[mm] | inches	[mm] | inches
Size (DN)	25 | 1”	50 | 2”	80 | 3”	100 | 4”	150 | 6”	200 | 8”	250 | 10”	300 | 12”
S - ANSI 150/PN 16	184 | 7.25”	254 | 10”	298 | 11.75”	352 | 13.88”	451 | 17.75”	543 | 21.38”	673 | 26.50”	737 | 29”
S - ANSI 300	197 | 7.75”	267 | 10.5”	317 | 12.5”	368 | 14.5”	473 | 18.62”	568 | 22.38”	708 | 27.88”	775 | 30.5”
S - ANSI 600	210 | 8.25”	286 | 11.25”	336 | 13.25”	394 | 15.5”	508 | 20”	609 | 24”	752 | 29.62”	819 | 32.25”
Ø	278 | 1.94”	278 | 10.94”	360 | 14.17”	360 | 14.17”	510 | 20.08”	510 | 20.08”	610 | 24.02”	718 | 28.27”
A	320 | 12.59”	350 | 13.78”	430 | 16.93”	490 | 19.29”	650 | 25.59”	750 | 29.53”	800 | 31.50”	950 | 37.40”
B	410 | 16.14”	430 | 16.93”	530 | 20.87”	600 | 23.62”	735 | 28.94”	850 | 33.46”	900 | 35.43”	1195 | 47.05”
C	100 | 3.93”	130 | 5.12”	150 | 5.90”	190 | 7.48”	225 | 8.86”	265 | 10.43”	340 | 13.39”	372 | 14.65”
D	130 | 5.11”	160 | 6.30”	200 | 7.87”	250 | 9.84”	275 | 10.83”	320 | 12.59”	440 | 17.32”	475 | 18.70”
F	310 | 12.20”	310 | 12.20”	320 | 12.60”	320 | 12.60”	420 | 16.54”	420 | 16.54”	470 | 18.50”	500 | 19.68”
G	260 | 10.23”	290 | 11.42”	350 | 13.78”	380 | 14.96”	410 | 16.14”	460 | 18.11”	560 | 22.05”	645 | 35.39”
H	420 | 16.53”	480 | 18.90”	580 | 22.83”	680 | 26.77”	875 | 34.45”	1015 | 39.96”	1140 | 44.88”	1322 | 52.05”
P	170 | 6.79”	200 | 7.87”	260 | 10.24”	290 | 11.42”	320 | 12.59”	370 | 14.57”	500 | 19.68”	630 | 24.80”
Tubing Connections	Øe 10 x Øi 8 (on request imperial sizing)							

Weight	Kg | lbs	Kg | lbs	Kg | lbs	Kg | lbs	Kg | lbs	Kg | lbs	Kg | lbs	Kg | lbs
ANSI 150/PN 16	44 | 97	61 | 134	105 | 231	146 | 322	308 | 679	408 | 899	900 | 1984	1335 | 2943
ANSI 300	45 | 99	62 | 137	109 | 240	156 | 344	345 | 761	470 | 1036	950 | 2094	1410 | 3108
ANSI 600	46 | 101	64 | 141	112 | 247	165 | 364	360 | 794	495 | 1091	1000 | 2204	1490 | 3285

Table 9 Weights and dimensions

Reflux 819 + SB/82 or HB/97

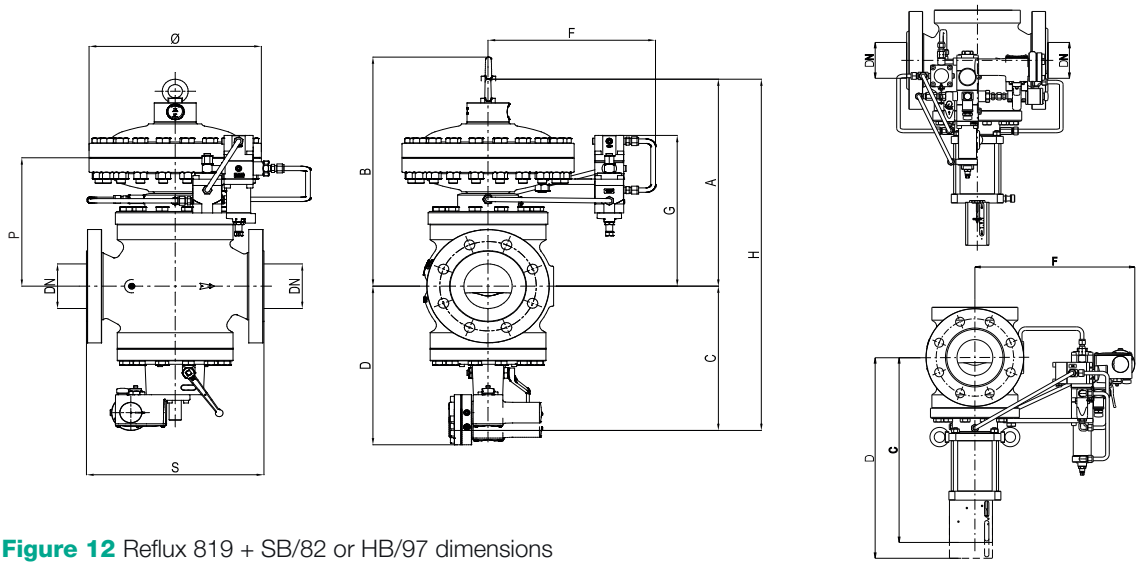

Figure 12 Reflux 819 + SB/82 or HB/97 dimensions

Weights and Dimensions (for other connections please contact your closest Pietro Fiorentini representative)								
	[mm] | inches	[mm] | inches	[mm] | inches	[mm] | inches	[mm] | inches	[mm] | inches	[mm] | inches	[mm] | inches
Size (DN)	25 | 1”	50 | 2”	80 | 3”	100 | 4”	150 | 6”	200 | 8”	250 | 10”	300 | 12”
S - ANSI 150/PN16	184 | 7.25”	254 | 10”	298 | 11.75”	352 | 13.88”	451 | 17.75”	543 | 21.38”	673 | 26.50”	737 | 29”
S - ANSI 300	197 | 7.75”	267 | 10.5”	317 | 12.5”	368 | 14.5”	473 | 18.62”	568 | 22.38”	708 | 27.88”	775 | 30.5”
S - ANSI 600	210 | 8.25”	286 | 11.25”	336 | 13.25”	394 | 15.5”	508 | 20”	609 | 24”	752 | 29.62”	819 | 32.25”
Ø	278 | 1.94”	278 | 10.94”	360 | 14.17”	360 | 14.17”	510 | 20.08”	510 | 20.08”	610 | 24.02”	718 | 28.27”
A	320 | 12.59”	350 | 13.78”	430 | 16.93”	490 | 19.29”	650 | 25.59”	750 | 29.53”	800 | 31.50”	950 | 37.40”
B with SB/82	410 | 16.14”	430 | 16.93”	530 | 20.87”	600 | 23.62”	735 | 28.94”	850 | 33.46”	900 | 35.43”	-
B with HB/97	-	-	-	-	-	-	-	1135 | 44.68”
C with SB/82	260 | 10.23”	265 | 10.43”	295 | 11.61”	325 | 12.79”	400 | 15.75”	450 | 17.72”	530 | 20.87”	-
C with HB/97	-	-	-	518 | 20.39”	645 | 25.39”	687 | 27.05”	796 | 31.34”	940 | 37.01”
D with SB/82	280 | 11.02”	330 | 12.99”	380 | 14.96”	440 | 17.32”	560 | 22.05”	625 | 24.61”	730 | 28.74”	-
D with HB/97	-	-	-	650 | 25.59”	835 | 32.87”	900 | 35.43”	1060 | 41.7”	1250 | 49.2”
F with SB/82	310 | 12.20”	310 | 12.20”	320 | 12.60”	320 | 12.60”	420 | 16.54”	420 | 16.54”	470 | 18.50”	-
F with HB/97	-	-	-	358 | 14.09”	410 | 16.14”	445 | 17.52”	510 | 20.08”	530 | 20.87”
G with SB/82	260 | 10.23”	290 | 11.42”	350 | 13.78”	380 | 14.96”	410 | 16.14”	460 | 18.11”	560 | 22.05”	-
G with HB/97	-	-	-	-	-	-	-	644 | 25.35”
H with SB/82	535 | 21.06”	590 | 23.23”	700 | 27.56”	790 | 31.10”	1025 | 40.3”	1200 | 47.24”	1330 | 52.36”	-
H with HB/97	-	-	-	1008 | 39.7”	1295 | 50.9”	1437 | 56.6”	1596 | 62.83”	1890 | 74.41”
P with SB/82	170 | 6.79”	200 | 7.87”	260 | 10.24”	290 | 11.42”	320 | 12.59”	370 | 14.57”	500 | 19.68”	-
P with HB/97	-	-	-	-	-	-	-	603 | 23.74”
Tubing Connections	Øe 10 x Øi 8 (on request imperial sizing)							

Weight	Kg | lbs	Kg | lbs	Kg | lbs	Kg | lbs	Kg | lbs	Kg | lbs	Kg | lbs	Kg | lbs
ANSI 150/PN 16 with SB/82	53 | 117	71 | 157	115 | 254	160 | 353	320 | 705	460 | 1014	950 | 2094	-
ANSI 150/PN 16 with HB/97	-	-	-	150 | 331	310 | 683	414 | 913	894 | 1971	1615 | 3560
ANSI 300 with SB/82	55 | 121	73 | 161	122 | 269	171 | 377	365 | 805	525 | 1157	1000 | 2205	-
ANSI 300 with HB/97	-	-	-	179 | 394	406 | 895	558 | 1230	1079 | 2379	1690 | 3725
ANSI 600 with SB/82	56 | 123	75 | 165	125 | 276	180 | 397	380 | 838	550 | 1213	1050 | 2315	-
ANSI 600 with HB/97	-	-	-	191 | 421	432 | 952	584 | 1287	1099 | 2423	1770 | 3902

Table 10 Weights and dimensions

Reflux 819 + PM/819

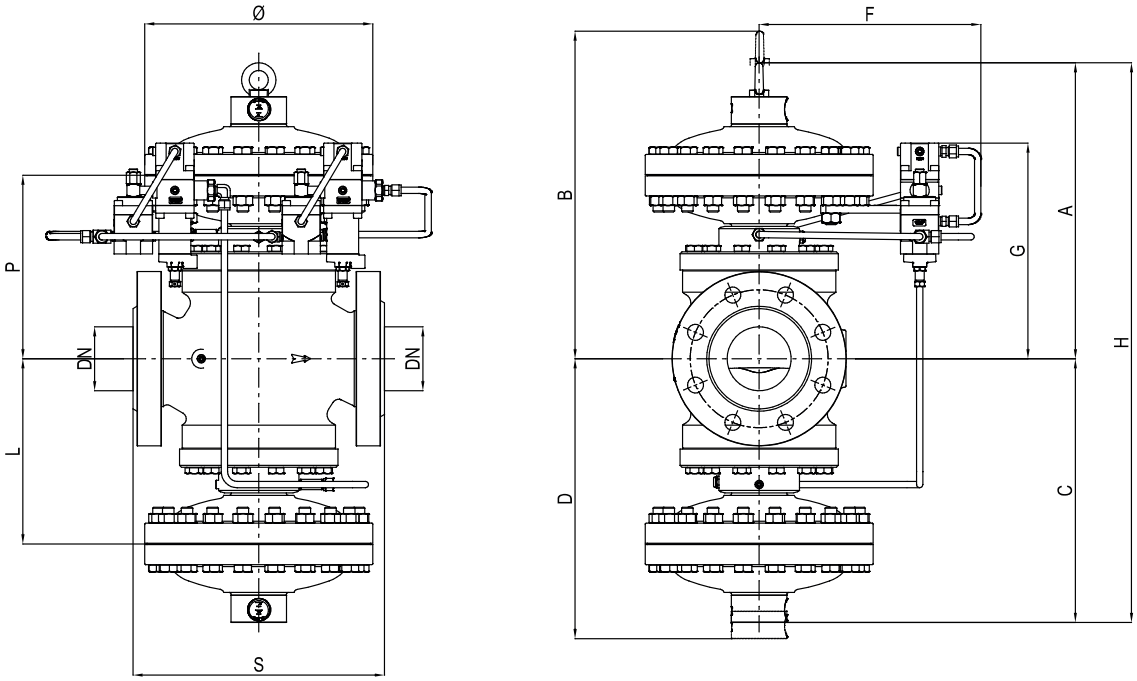

Figure 13 Reflux 819 + PM/819 dimensions

Weights and Dimensions (for other connections please contact your closest Pietro Fiorentini representative)							
	[mm] | inches	[mm] | inches	[mm] | inches	[mm] | inches	[mm] | inches	[mm] | inches	[mm] | inches
Size (DN)	25 | 1”	50 | 2”	80 | 3”	100 | 4”	150 | 6”	200 | 8”	250 | 10”
S - ANSI 150/PN 16	184 | 7.25”	254 | 10”	298 | 11.75”	352 | 13.88”	451 | 17.75”	543 | 21.38”	673 | 26.50”
S - ANSI 300	197 | 7.75”	267 | 10.5”	317 | 12.5”	368 | 14.5”	473 | 18.62”	568 | 22.38”	708 | 27.88”
S - ANSI 600	210 | 8.25”	286 | 11.25”	336 | 13.25”	394 | 15.5”	508 | 20”	609 | 24”	752 | 29.62”
Ø	278 | 10.94”	278 | 10.94”	360 | 14.17”	360 | 14.17”	510 | 20.07”	510 | 20.07”	610 | 24.01”
A	320 | 12.59”	350 | 13.67”	430 | 16.92”	490 | 19.29”	650 | 25.59”	750 | 29.52”	800 | 31.49”
B	410 | 16.14”	430 | 16.92”	530 | 20.86”	600 | 23.62”	735 | 28.93”	850 | 33.46”	900 | 35.43”
C	320 | 12.59”	350 | 13.77”	430 | 16.92”	490 | 19.29”	650 | 25.59”	750 | 29.52”	800 | 31.49”
D	410 | 16.14”	430 | 16.92”	530 | 20.86”	600 | 23.62”	735 | 28.93”	850 | 33.46”	900 | 35.43”
F	310 | 12.20”	310 | 12.20”	320 | 12.59”	320 | 12.59”	420 | 16.53”	420 | 16.53”	470 | 18.50”
G	260 | 10.23”	290 | 11.41”	350 | 13.77”	380 | 14.96”	410 | 16.14	460 | 18.11”	560 | 22.04”
H	640 | 25.19”	700 | 27.55”	860 | 33.85”	980 | 38.58”	1300 | 51.18”	1500 | 59.05”	1600 | 62.99”
P	170 | 6.69”	200 | 7.87”	260 | 10.23”	290 | 11.41”	320 | 12.59”	370 | 53.93”	500 | 19.68”
L	170 | 6.69”	200 | 7.87”	260 | 10.23”	290 | 11.41”	320 | 12.59”	370 | 53.93”	500 | 19.68”
Tubing Connections	Øe 10 x Øi 8 (on request imperial sizing)						

Weight	Kg | lbs	Kg | lbs	Kg | lbs	Kg | lbs	Kg | lbs	Kg | lbs	Kg | lbs
ANSI 150/PN 16	84 | 185	105 | 231	180 | 397	245 | 540	517 | 1140	670 | 1477	1400 | 3086
ANSI 300	85 | 187	106 | 234	184 | 406	255 | 562	554 | 1221	731 | 1612	1450 | 3197
ANSI 600	86 | 190	108 | 238	187 | 412	264 | 582	569 | 1254	756 | 1667	1500 | 3307

Table 11 Weights and dimensions

Reflux 819 + DB/819

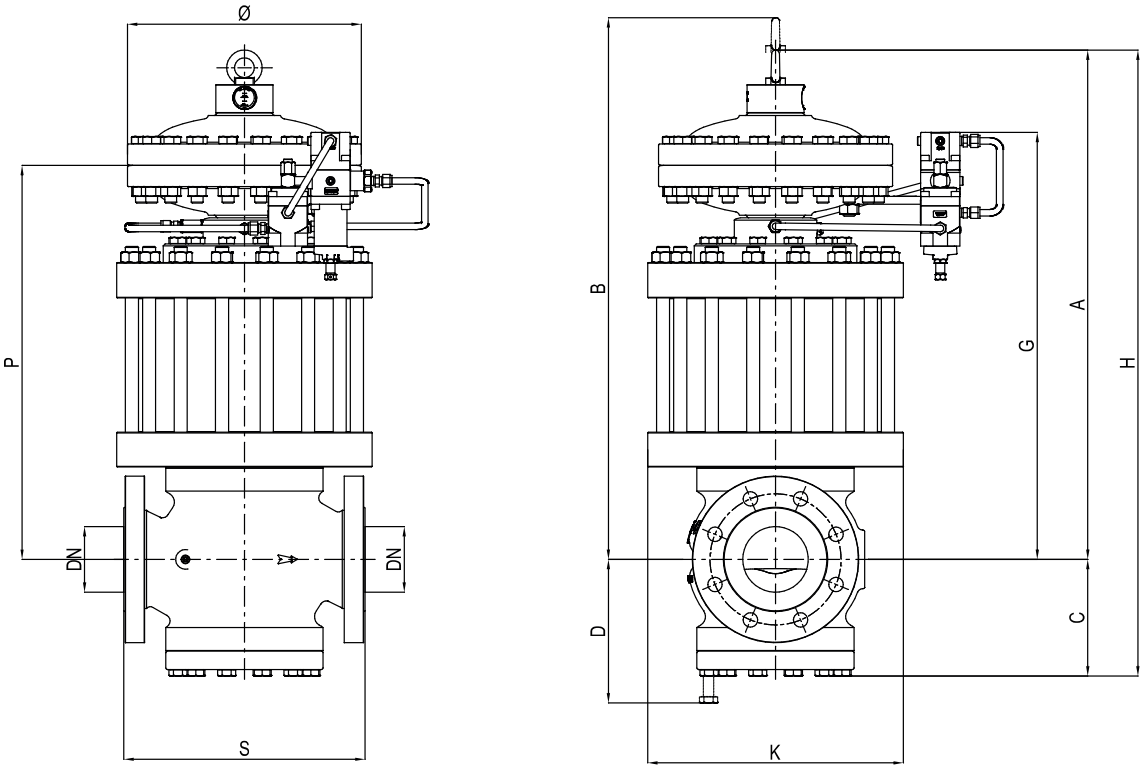

Figure 14 Reflux 819 + DB/819 dimensions

Weights and Dimensions (for other connections please contact your closest Pietro Fiorentini representative)								
	[mm] | inches	[mm] | inches	[mm] | inches	[mm] | inches	[mm] | inches	[mm] | inches	[mm] | inches	[mm] | inches
Size (DN)	25 | 1”	50 | 2”	80 | 3”	100 | 4”	150 | 6”	200 | 8”	250 | 10”	300 | 12”
S - ANSI 150/PN 16	184 | 7.25”	254 | 10”	298 | 11.75”	352 | 13.88”	451 | 17.75”	543 | 21.38”	673 | 26.50”	737 | 29”
S - ANSI 300	197 | 7.75”	267 | 10.5”	317 | 12.5”	368 | 14.5”	473 | 18.62”	568 | 22.38”	708 | 27.88”	775 | 30.5”
S - ANSI 600	210 | 8.25”	286 | 11.25”	336 | 13.25”	394 | 15.5”	508 | 20”	609 | 24”	752 | 29.62”	819 | 32.25”
Ø	278 | 1.94”	278 | 10.94”	360 | 14.17”	360 | 14.17”	510 | 20.08”	510 | 20.08”	610 | 24.02”	718 | 28.27”
A	520 | 20.47”	575 | 22.64”	700 | 27.56”	800 | 31.5”	935 | 36.81”	1085 | 42.72”	1300 | 51.18”	1505 | 59.25”
B	610 | 24.02”	640 | 25.20”	785 | 30.9”	895 | 35.24”	1120 | 44.09”	1250 | 49.21”	1500 | 59.05”	1771 | 69.72”
C	100 | 3.94”	130 | 5.12”	150 | 5.90”	190 | 7.48”	225 | 8.86”	265 | 10.43”	340 | 13.39”	372 | 14.65”
D	130 | 5.12”	160 | 6.30”	200 | 7.87”	250 | 9.84”	275 | 10.83”	320 | 12.60”	440 | 17.32”	475 | 18.70”
F	310 | 12.20”	310 | 12.20”	320 | 12.60”	320 | 12.60”	420 | 16.54”	420 | 16.54”	470 | 18.50”	500 | 19.68”
G	425 | 16.73”	495 | 19.49”	615 | 24.21”	670 | 26.38”	795 | 31.30”	895 | 35.24”	1100 | 43.31”	1220 | 48.03”
H	620 | 24.41”	705 | 27.76”	850 | 33.46”	990 | 38.97”	1160 | 45.67”	1350 | 53.15”	1640 | 64.57”	1877 | 73.90”
P	370 | 14.57”	400 | 15.75”	505 | 19.88”	585 | 23.03”	690 | 27.17”	770 | 30.31”	1000 | 39.37”	1205 | 47.44”
K	220 | 8.66”	300 | 11.81”	330 | 12.99”	390 | 15.35”	480 | 18.90”	595 | 23.42”	695 | 27.36”	745 | 29.33”
Tubing Connections	Øe 10 x Øi 8 (on request imperial sizing)							

Weight	Kg | lbs	Kg | lbs	Kg | lbs	Kg | lbs	Kg | lbs	Kg | lbs	Kg | lbs	Kg | lbs
ANSI 150/PN 16	70 | 154	126 | 278	195 | 430	260 | 573	565 | 1246	835 | 1841	1280 | 2822	2035 | 4486
ANSI 300	72 | 159	128 | 282	204 | 450	289 | 637	608 | 1340	925 | 2039	1380 | 3042	2230 | 4916
ANSI 600	73 | 161	130 | 287	207 | 456	298 | 657	640 | 1411	950 | 2094	1430 | 3152	2310 | 5093

Table 12 Weights and dimensions

Reflux 819 + DB/819 + SB/82 or HB/97

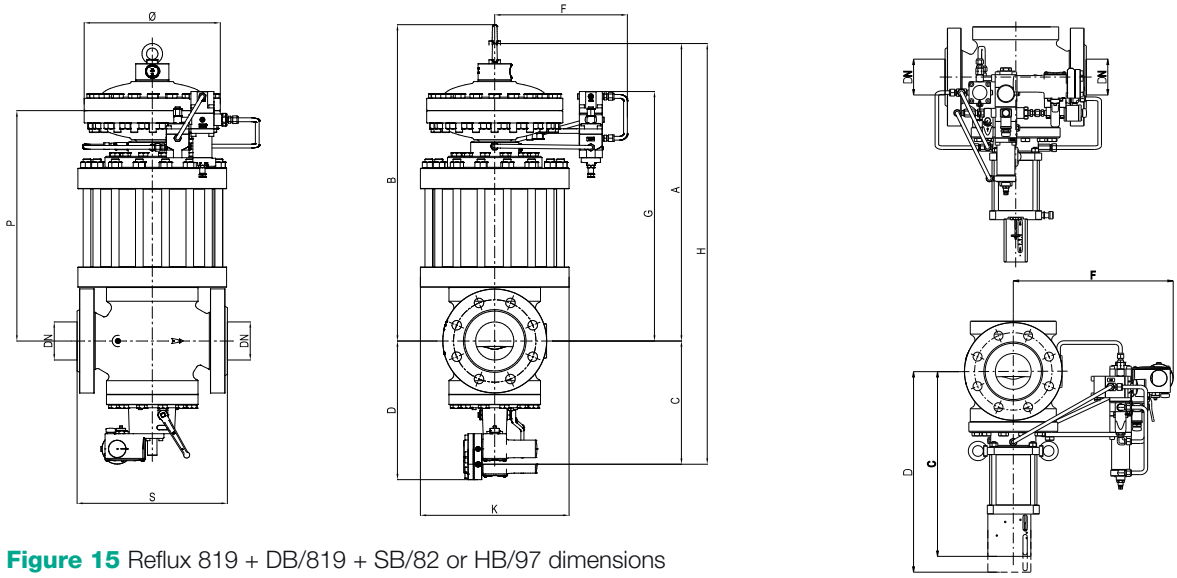

Figure 15 Reflux 819 + DB/819 + SB/82 or HB/97 dimensions

Weights and Dimensions (for other connections please contact your closest Pietro Fiorentini representative)								
	[mm] | inches	[mm] | inches	[mm] | inches	[mm] | inches	[mm] | inches	[mm] | inches	[mm] | inches	[mm] | inches
Size (DN)	25 | 1”	50 | 2”	80 | 3”	100 | 4”	150 | 6”	200 | 8”	250 | 10”	300 | 12”
S - ANSI 150/PN16	184 | 7.25”	254 | 10”	298 | 11.75”	352 | 13.88”	451 | 17.75”	543 | 21.38”	673 | 26.50”	737 | 29”
S - ANSI 300	197 | 7.75”	267 | 10.5”	317 | 12.5”	368 | 14.5”	473 | 18.62”	568 | 22.38”	708 | 27.88”	775 | 30.5”
S - ANSI 600	210 | 8.25”	286 | 11.25”	336 | 13.25”	394 | 15.5”	508 | 20”	609 | 24”	752 | 29.62”	819 | 32.25”
Ø	278 | 1.94”	278 | 10.94”	360 | 14.17”	360 | 14.17”	510 | 20.08”	510 | 20.08”	610 | 24.02”	718 | 28.27”
A with SB/82	520 | 20.47”	575 | 22.64”	700 | 27.56”	800 | 31.5”	935 | 36.81”	1085 | 42.72”	1300 | 51.18”	-
A with HB/97	-	-	-	-	-	-	-	1505 | 59.25”
B with SB/82	610 | 24.02”	640 | 25.20”	785 | 30.9”	895 | 35.24”	1120 | 44.09”	1250 | 49.21”	1500 | 59.05”	-
B with HB/97	-	-	-	-	-	-	-	1771 | 69.72”
C with SB/82	215 | 8.46”	240 | 9.45”	270 | 10.63”	300 | 11.81”	375 | 14.76”	450 | 17.72”	530 | 20.87”	-
C with HB/97	-	-	-	518 | 20.39”	645 | 25.39”	687 | 27.05”	796 | 31.34”	940 | 37.01”
D with SB/82	280 | 11.02”	330 | 12.99”	380 | 14.96”	440 | 17.32”	560 | 22.05”	625 | 24.60”	730 | 28.74”	-
D with HB/97	-	-	-	650 | 25.59”	835 | 32.87”	900 | 35.43”	1060 | 41.7”	1250 | 49.21”
F with SB/82	310 | 12.20”	310 | 12.20”	320 | 12.60”	320 | 12.60”	420 | 16.53”	420 | 16.53”	470 | 18.50”	-
F with HB/97	-	-	-	358 | 14.09”	410 | 16.14”	445 | 17.52”	510 | 20.08”	530 | 20.87”
G with SB/82	425 | 16.73”	495 | 19.49”	615 | 24.21”	670 | 26.38”	795 | 31.30”	895 | 35.24”	1100 | 43.31”	-
G with HB/97	-	-	-	-	-	-	-	1220 | 48.03”
H with SB/82	735 | 28.94”	815 | 32.09”	970 | 38.19”	1100 | 43.31”	1310 | 51.57”	1535 | 60.43”	1830 | 72.05”	-
H with HB/97	-	-	-	1318 | 51.89”	1580 | 62.20”	1772 | 69.76”	2096 | 82.52”	2445 | 96.26”
P	370 | 14.57”	400 | 15.75”	505 | 19.88”	585 | 23.03”	690 | 27.17”	770 | 30.31”	1000 | 39.37”	1205 | 47.44”
K	220 | 8.66”	300 | 11.81”	330 | 12.99”	390 | 15.35”	480 | 18.90”	595 | 23.42”	695 | 27.36”	745 | 29.33”
Tubing Connections	Øe 10 x Øi 8 (on request imperial sizing)							

Weight	Kg | lbs	Kg | lbs	Kg | lbs	Kg | lbs	Kg | lbs	Kg | lbs	Kg | lbs	Kg | lbs
ANSI 150/PN 16	79 | 174	136 | 300	205 | 452	274 | 604	577 | 1272	887 | 1955	1330 | 2932	-
ANSI 150/PN 16 with HB/97	-	-	-	266 | 586	569 | 1254	569 | 1254	569 | 1254	2315 | 5104
ANSI 300	82 | 181	139 | 306	217 | 478	304 | 670	628 | 1384	980 | 2161	1430 | 3153	-
ANSI 300 with HB/97	-	-	-	318 | 701	661 | 1457	1006 | 2218	1761 | 3882	2503 | 5518
ANSI 600	83 | 183	141 | 311	220 | 485	313 | 690	660 | 1455	1500 | 3307	1480 | 3263	-
ANSI 600 with HB/97	-	-	-	330 | 727	687 | 1515	1022 | 2253	1781 | 3926	2590 | 5710

Table 13 Weights and dimensions

Reflux 819 + DB/819 + PM/819

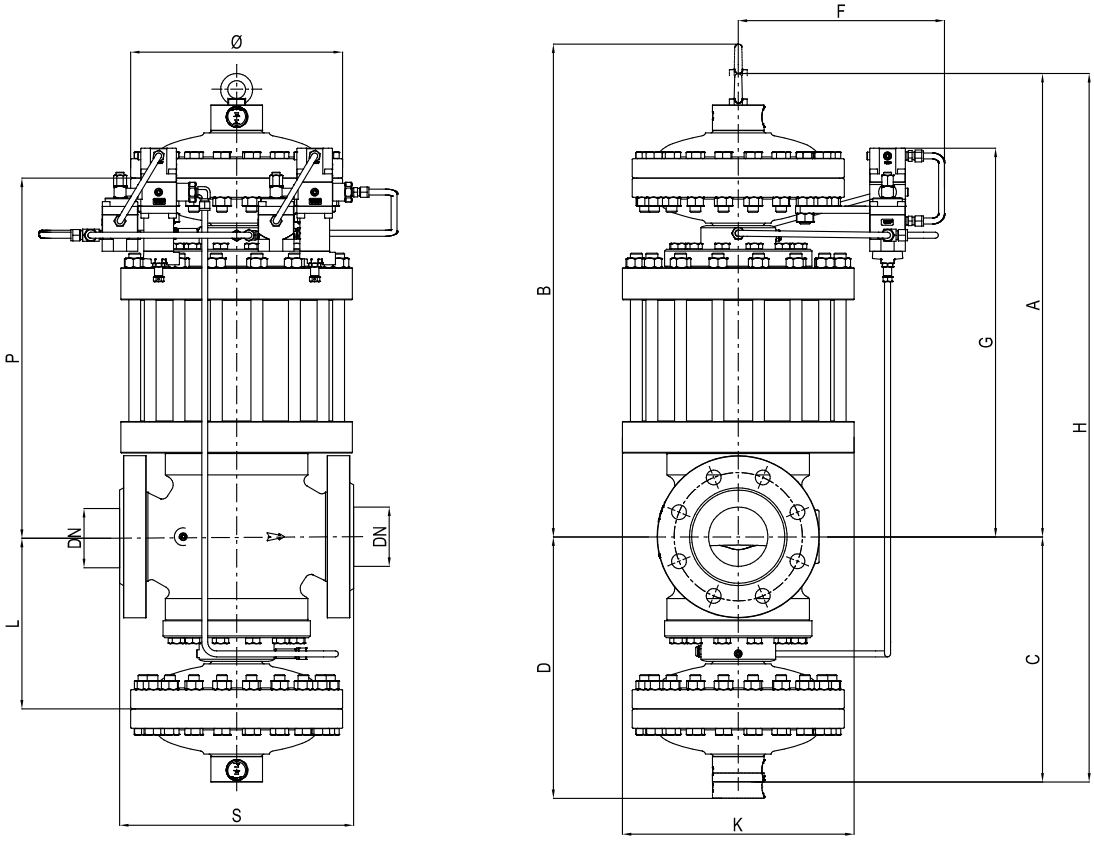

Figure 16 Reflux 819 + DB/819 + PM/819 dimensions

Weights and Dimensions (for other connections please contact your closest Pietro Fiorentini representative)							
	[mm] | inches	[mm] | inches	[mm] | inches	[mm] | inches	[mm] | inches	[mm] | inches	[mm] | inches
Size (DN)	25 | 1”	50 | 2”	80 | 3”	100 | 4”	150 | 6”	200 | 8”	250 | 10”
S - ANSI 150/PN 16	184 | 7.25”	254 | 10”	298 | 11.75”	352 | 13.88”	451 | 17.75”	543 | 21.38”	673 | 26.50”
S - ANSI 300	197 | 7.75”	267 | 10.5”	317 | 12.5”	368 | 14.5”	473 | 18.62”	568 | 22.38”	708 | 27.88”
S - ANSI 600	210 | 8.25”	286 | 11.25”	336 | 13.25”	394 | 15.5”	508 | 20”	609 | 24”	752 | 29.62”
Ø	278 | 1.94”	278 | 10.94”	360 | 14.17”	360 | 14.17”	510 | 20.08”	510 | 20.08”	610 | 24.02”
A	520 | 20.47”	575 | 22.64”	700 | 27.56”	800 | 31.5”	935 | 36.81”	1085 | 42.72”	1300 | 51.18”
B	610 | 24.02”	640 | 25.20”	785 | 30.9”	895 | 35.24”	1120 | 44.09”	1250 | 49.21”	1500 | 59.05”
C	320 | 12.59”	350 | 13.78”	430 | 16.93”	490 | 19.29”	650 | 25.59”	750 | 29.53”	800 | 31.50”
D	410 | 16.14”	430 | 16.93”	530 | 20.87”	600 | 23.62”	735 | 28.94”	850 | 33.46”	900 | 35.43”
F	310 | 12.20”	310 | 12.20”	320 | 12.60”	320 | 12.60”	420 | 16.53”	420 | 16.53”	470 | 18.50”
G	425 | 16.73”	495 | 19.49”	615 | 24.21”	670 | 26.38”	795 | 31.30”	895 | 35.24”	1100 | 43.31”
H	840 | 33.07”	925 | 36.42	1130 | 44.49”	1290 | 50.79”	1585 | 62.40”	1835 | 72.24”	2100 | 82.68”
L	170 | 6.69”	200 | 7.87”	260 | 10.24”	290 | 11.42”	320 | 12.60”	370 | 14.57”	500 | 19.68”
P	370 | 14.57”	400 | 15.75”	505 | 19.88”	585 | 23.03”	690 | 27.17”	770 | 30.31”	1000 | 39.37”
K	220 | 8.66”	300 | 11.81”	330 | 12.99”	390 | 15.35”	480 | 18.90”	595 | 23.42”	695 | 27.36”
Tubing Connections	Øe 10 x Øi 8 (on request imperial sizing)						

Weight	Kg | lbs	Kg | lbs	Kg | lbs	Kg | lbs	Kg | lbs	Kg | lbs	Kg | lbs
ANSI 150/PN 16	110 | 242	170 | 375	270 | 595	359 | 791	774 | 1706	1097 | 2418	1780 | 3924
ANSI 300	112 | 247	172 | 379	267 | 588	388 | 855	783 | 1726	1185 | 2612	1880 | 4145
ANSI 600	113 | 249	174 | 383	270 | 595	397 | 875	815 | 1797	1210 | 2668	1930 | 4254

Table 14 Weights and dimensions

Sizing and Cg

In general, the choice of a regulator is made based on the calculation of the flow rate determined by the use of formulae using the flow rate coefficients (Cg) and the form factor (K1) as indicated by the EN 334 standard. Sizing available through Pietro Fiorentini's online sizing programme.

Flow rate coefficient								
Nominal size	25	50	80	100	150	200	250	300
Inches	1”	2”	3”	4”	6”	8”	10”	12”
Cg	575	2220	4937	8000	16607	25933	36525	55000
K1	106.78	106.78	106.78	106.78	106.78	106.78	106.78	106.78

Remark: For safety relief valve sizing it is required to use the Cg values of this table regardless the accessories installed on the regulator. As per EN334 Cg value acceptance criteria these values may vary up to 10% which we recommend considering during the sizing process.

Table 15 Flow rate coefficient

For sizing **PRESS HERE** or use the QR code:

Note: In case you do not have the proper credentials to access, feel free to contact your closest Pietro Fiorentini representative.

In general the online sizing considers multiple variables as the regulator is installed in a system, enabling a better and multiperspective approach to the sizing.

For different gases, and for natural gas with a different relative density other than 0.61 (compared to air), the correction coefficients from the following formula shall be applied:

$$F_c = \sqrt{\frac{175.8}{S \times (273.16 + T)}}$$

S = relative density (refer to Table 16)
T = gas temperature (°C)

$$F_c = \sqrt{\frac{316.44}{S \times (459.67 + T)}}$$

S = relative density (refer to Table 16)
T = gas temperature (°F)

Correction Factor Fc		
Gas type	**Relative Density S**	**Correction Factor Fc**
Air	1.00	0.78
Propane	1.53	0.63
Butane	2.00	0.55
Nitrogen	0.97	0.79
Oxygen	1.14	0,73
Carbon dioxide	1.52	0.63
Note: the table shows the Fc correction factors valid for Gas, calculated at a temperature of 15°C and at the declared relative density.		

Table 16 Correction Factor Fc

Flow rate conversion
Stm^3/h x 0.94795 = Nm^3/h

Table 17 Flow rate conversion

Nm^3/h Reference conditions:
T= 0 °C; P= 1 bar(a) | T= 32 °F; P= 14.5 psi(a)
Stm^3/h Reference conditions:
T= 15 °C; P= 1 bar(a) | T= 59 °F; P= 14.5 psi(a)

CAUTION:

In order to get optimal performance, to avoid premature erosion phenomena and to limit noise emissions, it is recommended to check the gas speed and its compliance with local practice and regulations. The gas speed at the outlet flange may be calculated by means of the following formula:

$$V = 345.92 \times \frac{Q}{DN^2} \times \frac{1 - 0.002 \times Pd}{1 + Pd}$$

V = gas speed in m/s
Q = gas flow rate in Stm^3/h
DN = nominal size of regular in mm
Pd = outlet pressure in barg

$$V = 0.0498 \times \frac{Q}{DN^2} \times \frac{14.504 - 0.002 \times Pd}{14.504 + Pd}$$

V = gas speed in ft/s
Q = gas flow rate in Scfh
DN = nominal size of regular in inches
Pd = outlet pressure in psig

Sizing of regulators is usually made based on valve Cg value (Table 15).

Flow rates at fully open position and various operating conditions are related by the following formulae where:

Q = flow rate in Stm^3/h
Pu = inlet pressure in bar (abs)
Pd = outlet pressure in bar (abs).

- **A** > when the Cg value of the regulator is known, as well as Pu and Pd, the flow rate can be calculated as follows:

- **A-1** in sub critical conditions: (Pu < 2 x Pd)

$$Q = 0.526 \times Cg \times Pu \times \sin\left(K1 \times \sqrt{\frac{Pu - Pd}{Pu}}\right)$$

- **A-2** in critical conditions: (Pu ≥ 2 x Pd)

$$Q = 0.526 \times Cg \times Pu$$

- **B** > vice versa, when the values of Pu, Pd and Q are known,the Cg value, and hence the regulator size, may be calculated using:

- **B-1** in sub-critical conditions: (Pu < 2xPd)

$$Cg = \frac{Q}{0.526 \times Pu \times \sin\left(K1 \times \sqrt{\frac{Pu - Pd}{Pu}}\right)}$$

- **B-2** in critical conditions (Pu ≥ 2 x Pd)

$$Cg = \frac{Q}{0.526 \times Pu}$$

NOTE: The sin value is understood to be DEG.

Installations

Here below, at glance, are some typical installations by application and geographical location. On demand we are available to supply a more comprehensive experience list and/or references.

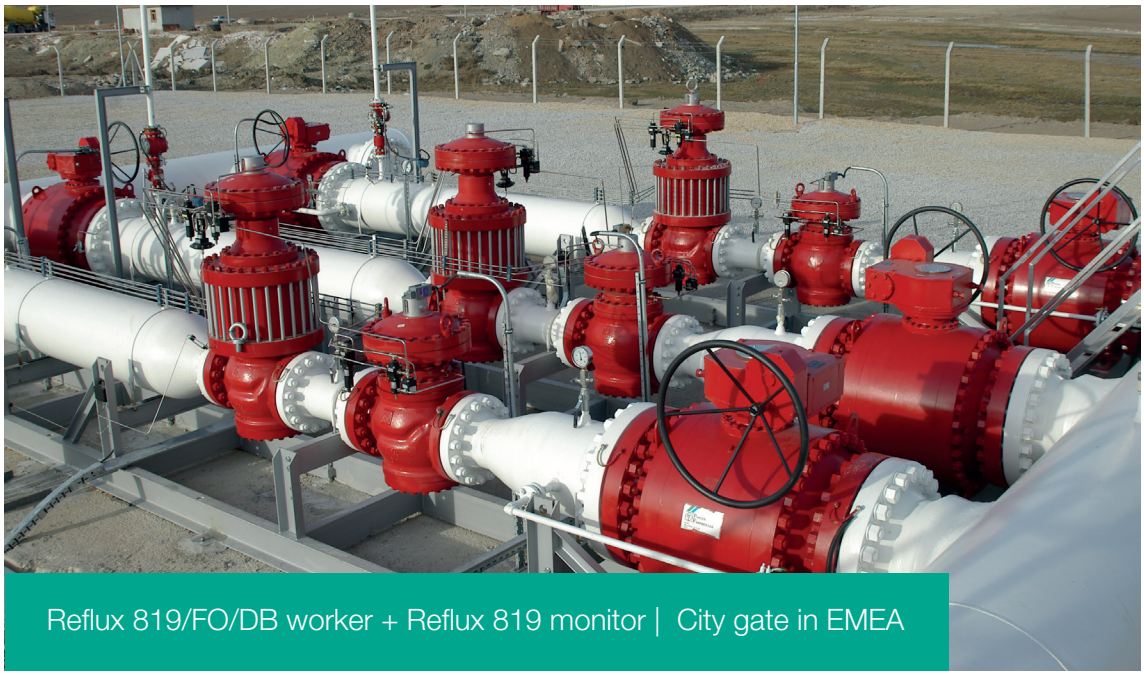

Reflux 819/FO/DB worker + Reflux 819 monitor | City gate in EMEA

Reflux 819 worker + FIO smart unit controller
Transmission application in China

Customer Centricity

Customer centricity is a way of running your business — implementing a perfect customer experience at each stage of the pipeline. Pietro Fiorentini is one of the main Italian international company with high focus on product and service quality.

The main strategy is to create a stable, long-term relationship, putting the customer's needs first. Lean management and customer centricity are used to improve and maintain the highest level of customer experience.

Support

Pietro Fiorentini's top priority is to provide support to the client in all phases of project development, during installation, start up and operation. Pietro Fiorentini has developed a highly standardized Intervention-Management-System (IMS), which helps to facilitate the entire process and putting the customer at the forefront of every decision in our process while manufacturing or developing a product to help improve the product and service. With our IMS business model many services are available remotely, avoiding long waiting times, improving service, and avoiding unnecessary expenses.

Training

Pietro Fiorentini offers training services available for both experienced operators and new customers. The training is offered for all levels of our customers which can include one or all of the following: sizing of equipment, application, installation, operation, maintenance and is prepared according to the level of use and the customer's need.

Customer Relation Management (CRM)

The service and care of our customers are one of the main missions and vision of Pietro Fiorentini. For this reason, Pietro Fiorentini has enhanced the customer relation management system. This enables us to track every opportunity and request from our customers into one single information point and allows us to coordinate information allowing us to give the customer improved service.

Sustainability

Here at Pietro Fiorentini, we believe in a world capable of improvement through technology and solutions that can shape a more sustainable future. That is why respect for people, society and the environment form the cornerstones of our strategy.

Our commitment to the world of tomorrow

While in the past we limited ourselves to providing products, systems and services for the oil & gas sector, today we want to broaden our horizons and create technologies and solutions for a digital and sustainable world. We have a particular focus on renewable energy projects to help make the most of our planet's resources and create a future in which the younger generations can grow and prosper.

The time has come to understand how and why we operate now.

Pietro Fiorentini

TB0005ENG

The data are not binding. We reserve the right
to make changes without prior notice.

reflux819_technicalbrochure_ENG_revH

www.fiorentini.com